Department of Forensic Science

COPYRIGHT © 2023

TRACE EVIDENCE PROCEDURES MANUAL

VIRGINIA
DEPARTMENT
OF
FORENSIC SCIENCE

UNCONTROLLED
COPY

TABLE OF CONTENTS

1 Introduction

2 Explosives

2.1 Analytical Approach
2.2 Physical Examination
2.3 Analysis of Chemical Reaction Devices
2.4 Analysis of Unconsumed Pyrotechnic Safety Fuse
2.5 Analysis of Unconsumed Low Explosive Powder
2.6 Analysis of Intact High Explosives
2.7 Extractions
2.8 Microchemical Spot Tests
2.9 Ignition Test
2.10 Instrumental Analysis
2.11 Documentation
2.12 Report Wording

3 Fibers

3.1 Analytical Approach
3.2 Recovery of Hairs and/or Fibers
3.3 Fiber Identification
3.4 Fiber Comparison
3.5 Fabric Construction
3.6 Ropes and Cordage
3.7 Documentation
3.8 Report Wording

4 Fire Debris

4.1 Analytical Approach
4.2 Direct Injections
4.3 Ambient Headspace
4.4 Solvent Extraction
4.5 Passive Adsorption-Elution
4.6 Gas Chromatography-Mass Spectrometry (GC-MS)
4.7 Identification Criteria
4.8 Documentation
4.9 Report Wording

5 Fracture Match

5.1 Purpose
5.2 Analytical Approach
5.3 Minimum Standards and Controls
5.4 Analytical Procedures
5.5 References
5.6 Documentation
5.7 Report Wording

6 General Chemical

6.1 Analytical Approach
6.2 Minimum Standards and Controls, Documentation, Report Wording
6.3 Acids and Bases

COPYRIGHT © 2023
VIRGINIA DEPARTMENT OF FORENSIC SCIENCE

UNCONTROLLED COPY

6.4 Bank Dyes
6.5 Nitrous Oxide and Halogenated Hydrocarbons
6.6 Red Phosphorus and Iodine
6.7 Salt
6.8 Sugars
6.9 Tapes and Adhesives
6.10 Tear Gas and Pepper Sprays
6.11 Fatty Acid Based Products

7 Glass

7.1 Analytical Approach
7.2 Recovery of Glass Particles from Clothing and Objects
7.3 Physical Properties
7.4 Refractive Index (RI) Measurement by GRIM3 System
7.5 Direction-of-Impact
7.6 Sequence-of-Impact
7.7 Documentation
7.8 Formation of the Opinion in Glass Comparisons
7.9 Report Wording

8 Hair

8.1 Analytical Approach
8.2 Recovery of Hairs and/or Fibers
8.3 Human and Animal Hair Identification
8.4 Evaluation of Human Hairs for Nuclear DNA Suitability
8.5 Evaluation of Human Hairs for Mitochondrial DNA Suitability
8.6 Documentation
8.7 Report Wording

9 Paint

9.1 Analytical Approach
9.2 Paint Recovery Techniques
9.3 Macroscopic/Microscopic Examination
9.4 Microchemical Tests
9.5 Fluorescence
9.6 Instrumental Analysis
9.7 Documentation
9.8 Report Wording

10 Primer Residue

10.1 Analytical Approach
10.2 Carbon Evaporation
10.3 Automated SEM-EDS Primer Residue Analysis, ASPEX: VP2000 and Explorer
10.4 Documentation
10.5 Cartridge Case Residue Examination
10.6 Inanimate Objects Examination
10.7 Report Wording

11 Lamp Filaments

11.1 Introduction
11.2 Safety Considerations
11.3 Equipment

COPYRIGHT © 2023
VIRGINIA DEPARTMENT OF FORENSIC SCIENCE

UNCONTROLLED COPY

11.4 Minimum Standards and Controls
11.5 Procedure
11.6 Interpretation of Results and Reporting
11.7 Full Report Wording Examples
11.8 References

12 Fourier Transform Infrared Spectrophotometer (FTIR)

12.1 Overview
12.2 Bench QC
12.3 Microscope Accessory QC
12.4 ATR Accessories
12.5 Casework Analysis
12.6 Instrumental Conditions
12.7 Maintenance
12.8 Documentation

13 Gas Chromatograph (GC)

13.1 Materials
13.2 Maintenance
13.3 QC Procedures
13.4 Analysis of Casework Samples
13.5 Documentation
13.6 Generally Used GC-FID Methods

14 Gas Chromatograph-Mass Spectrometer (GC-MS)

14.1 Materials
14.2 Maintenance
14.3 QC Procedures
14.4 Analysis of Casework Samples
14.5 Documentation
14.6 Generally Used GC-MS Methods

15 Glass Refractive Index Measurement System (GRIM3)

15.1 Introduction
15.2 Calibration
15.3 Monthly QA
15.4 Day-of-Use QA
15.5 Case QC Check

16 Ion Chromatograph (IC)

17 Microspectrophotometer (MSP)

17.1 Overview
17.2 Day-of-Use QC Check
17.3 Analysis of Casework Samples
17.4 Maintenance
17.5 References

18 Scanning Electron Microscope-Energy Dispersive X-Ray Analysis (SEM-EDS)

18.1 General
18.2 ASPEX Daily Operations Log

COPYRIGHT © 2023
VIRGINIA DEPARTMENT OF FORENSIC SCIENCE

UNCONTROLLED COPY

18.3 SEM-EDS System Maintenance Schedule
18.4 ASPEX Emergency Shutdown Procedures
18.5 ASPEX EDS System
18.6 SEM-EDS Primer Residue Kit – QC

19 X-Ray Powder Diffractometer (XRD)

19.1 Overview
19.2 Day-of-Use QC
19.3 Instrument Conditions

20 Reporting Guidelines

21 Quality Assurance

21.1 Introduction
21.2 Balances
21.3 Chemicals and Reagents
21.4 Critical Supplies
21.5 Eppendorf Pipettes
21.6 Digital Calipers
21.7 Microscopes
21.8 pH Meter
21.9 Refrigerators and Freezers
21.10 Thermometers and Ovens
21.11 Handheld UV Source

22 Commonly Used Abbreviations

COPYRIGHT © 2023
VIRGINIA DEPARTMENT OF FORENSIC SCIENCE

UNCONTROLLED COPY

1 INTRODUCTION

1.1 Trace Evidence examinations comprise a wide variety of evidence types. This manual consists of the procedures most routinely used to analyze evidence submitted to the Trace Evidence (TE) Section (the Section) of the Virginia Department of Forensic Science (the Department, DFS). This manual, in combination with the Section Training Manual, provides the basis for effective quality management of analyses. The Department's Quality Manual (QM) and Safety Manual provide additional guidelines.

1.2 This manual is not all-inclusive. Its purpose is to provide a framework of analytical procedures for the Trace Evidence Examiner. Every effort has been made to document the routine procedures used by the Section and to provide appropriate references. Many procedures have been adapted from standard laboratory practices and, therefore, no specific reference may be available.

1.3 For examinations that involve the comparison of an unknown to a known, the unknown item(s) shall be evaluated to identify general characteristics suitable for comparison prior to examination of the known item(s). In some situations, it may be more appropriate to preliminarily characterize the known item(s) prior to assessment of any unknown, such as when the target for further comparison is unclear. The examiner's case notes must document the order of item evaluation and their respective suitability for comparison.

COPYRIGHT © 2023

1.4 Every case is unique and must be evaluated by the individual examiner. Not all possible analyses that may be encountered in casework can be appropriately covered in a procedures manual nor can all possible variations to a described procedure be included. It is always the examiner's responsibility to choose the best analytical scheme for each individual case, particularly for evidence not routinely encountered. It is expected that Supervisors or the Chemistry Program Manager will be consulted for extraordinary procedures and that deviations, additions, or exclusions from existing procedures shall occur in accordance with the Department's QM (¶ 5.3.10, ¶ 16.2.4, and ¶ 16.2.14).

VIRGINIA DEPARTMENT OF FORENSIC SCIENCE

1.4.1 New methods must be validated before use. Published methods must be verified to work in each Regional Laboratory before use. Prior to beginning a validation process, consult the Chemistry Program Manager for an appropriate validation plan.

1.5 Reference collections of data or materials used for identification, comparison or interpretation shall be fully documented, uniquely identified and properly controlled.

1.5.1 Purchased reference collections of data or materials are obtained with documentation and unique identification of the data or materials.

1.5.1.1 Examples of these types of reference collections include, but are not limited to:

- GC-MS Libraries, both electronic and hard copy (e.g., NIST, Wiley, EPA/NIH)
- FTIR Libraries, both electronic and hard copy (e.g., Sadtler, Aldrich, Hummel, Georgia State)
- Microtrace Forensic Fiber Reference Collection
- Collaborative Testing Services, Inc. Reference Collection of Synthetic Fibers
- Scientific Polymer Products, Polymer Sample Kits
- Locke Certified Glass Standards
- Supelco Inc. or Alltech/Applied Science Hydrocarbon and Alcohol Kits
- Collaborative Testing Automotive Paints
- PDQ Paint Data Query paint database (not purchased, obtained from the RCMP)
- Automotive Refinish Color Collection
- NCFS Ignitable Liquids Reference Collection

1.5.2 In-house reference collections of materials shall be uniquely identified.

UNCONTROLLED COPY

1.5.2.1 Purchased or donated materials may be identified by name and a laboratory identification number. New entries shall have the name, laboratory identification number, source of material and the date and initials of the person who obtained the material.

Current in-house reference collections of materials include:

- Ignitable Liquids (Statewide)
- Tapes (Central)
- Pigment Powder (Central)
- Explosives (Central)
- Fibers (Central)

1.5.2.1.1 Data generated and retained from these products must be correlated to the specific product with the laboratory identification number.

1.5.2.1.2 A spreadsheet inventory of the contents of these reference collections will be maintained on the Trace Evidence Shared Folders.

COPYRIGHT © 2023

1.5.2.1.3 All examiners in the Section are responsible for properly labeling and entering new reference collection items into the spreadsheet. See ¶ 1.4.2.2.1 for the procedure for statewide collections.

VIRGINIA DEPARTMENT OF FORENSIC SCIENCE

1.5.2.2 All collections distributed and used by examiners statewide (e.g., the Ignitable Liquids Reference Collection), shall have the same unique identifiers.

1.5.2.2.1 The Central Laboratory Section Supervisor shall designate an examiner to be responsible for a statewide reference collection. The examiner will be responsible for assigning laboratory identification numbers, entering new items into the spreadsheet and distributing aliquots of properly labeled reference material (and associated data) to each regional laboratory in a timely fashion.

1.5.2.2.2 Regional laboratory staff shall request laboratory identification numbers from the designated examiner and promptly forward new items for inclusion into the statewide reference collection to the designee.

1.5.2.3 These collections are properly controlled by limiting their access to Trace Evidence personnel.

1.5.3 In-house data libraries are considered reference collections and are found on the following instruments:

- GC/MS
- FTIR
- XRD

1.5.3.1 The following information, if applicable, shall be included with each new entry into in-house data libraries:

- Compound/Product name
- Lot number or laboratory identification number
- Date
- Initials of person entering data

1.5.3.2 For in-house libraries, each entry is automatically identified by a unique tracking number generated by the instrument software.

UNCONTROLLED COPY

1.5.3.3 In-house libraries shall be generated or modified either by an instrument operator or by a designee of the Section Supervisor.

1.5.4 A list of Trace Evidence reference collections is maintained and is available to Section personnel on the network drive in Trace Evidence Shared Folders.

1.5.5 Materials used in casework for comparison shall be documented in the case notes.

1.5.6 Materials that are not a part of a reference collection but that are retained for training, display or other purposes must be clearly marked as such.

1.6 Worksheets are provided as controlled forms and should be used as designed. Examiners are reminded to take appropriate notes which will allow for another examiner/supervisor to evaluate the data, interpret the results and come to the same conclusion; and also be able to repeat the analysis under conditions as close as possible to the original. There may be times where plain paper may be useful for note taking. This is an acceptable practice as long as the evidence description and pertinent information regarding tests performed are recorded.

COPYRIGHT © 2023

1.7 Evidence sample selection is very much dependent upon the type and amount of evidence received and the examination(s) requested. If no specific selection guideline is mentioned in this manual, it is the examiner's responsibility to ensure that the case file notes explain how/why samples were selected for analysis, when appropriate. Reported conclusions shall be based on the samples selected and examined.

VIRGINIA DEPARTMENT OF FORENSIC SCIENCE

1.8 Internet references included in case file documentation will at a minimum contain the website address and the date accessed/printed.

1.9 The case file notes will contain documentation as to what types of materials were generated during the analysis (e.g., 16 Post-it type notes used to recover hairs/fibers from Item 21) and how they are being packaged for return. (e.g., 3 round plastic boxes containing debris from Item 5 placed in a sealed plastic bag and returned to Container 5.)

1.10 If a test result, observation, or calculation is rejected, the reason for the rejection shall be documented. In addition, the identity of the individual taking the action and the date shall be documented. For example, if your sample is too weak or too strong and you have to rerun it, print and retain the total ion chromatogram (TIC) or the peak of interest's mass spectrum and write the reason for rejection on it. In the absence of a spectrum or TIC or when data collection was incomplete, include in your notes the descriptive reason for the rejection.

1.11 Disagreements, including documentation requirements, shall be reconciled first by discussion between the parties involved. The Section/Group Supervisor may be called upon to review the situation and make a decision at that time. The Chemistry Program Manager would become involved if resolution is still pending. The Technical Services Director would be the final decision maker in the process, if necessary.

1.12 Electronic data of examination and QA/QC documentation which also exists as printed, hard copies will be copied periodically from the hard drives to external storage.

1.13 The Department's laboratory facilities provide sufficient environmental conditions to conduct all tests listed in this Procedures Manual with no further consideration required.

1.14 Effective separation is maintained between the SEM-EDS lab and the Firearms and Toolmarks (FX) Section with separate air handling systems for each Section and by not permitting Firearms and Toolmarks personnel in the SEM-EDS lab, by using a sticky mat at the entry to the SEM-EDS lab and changing it as needed, and by being cautious when a Trace Examiner must be present in the FX Section.

1.15 Good housekeeping is important when analyzing evidence particularly when the evidence is present at a "trace" or microscopic level.

1.15.1 Ensure that cleanliness is maintained throughout the laboratory areas.

UNCONTROLLED COPY

1.15.2 Ensure that work areas are cleaned prior to evidence being retrieved and/or opened.

1.16 Instrumentation and Equipment – General Guidelines

1.16.1 After an instrument/equipment has been shut down or significant maintenance has been performed, verify that the instrument/equipment is fit for use by analyzing QA samples appropriate for that instrument. Ensure the instrument performs as expected before returning the instrument to service for casework.

1.16.1.1 Retain instrument verification documentation.

1.16.2 Any instrument or equipment that has been subjected to overloading or mishandling, gives suspect results, or has been shown to be defective or outside specified limits, shall be taken out of service.

1.16.2.1 The instrument or equipment shall be clearly labeled as out of service.

1.16.2.2 The effect of the defect or departure from specified limits on previously analyzed case samples will be examined and any non-conforming work will be addressed following the Department's QM.

COPYRIGHT © 2023

1.16.2.3 Once the issue has been addressed, verify that the instrument/equipment performs as expected by analyzing QA samples appropriate for that instrument before returning the instrument/equipment to service for casework.

VIRGINIA DEPARTMENT OF FORENSIC SCIENCE

1.16.2.4 Retain instrument verification documentation.

1.16.3 Replacement Instrument Installation

1.16.3.1 Obtain documentation from the instrument service representative that demonstrates that the instrument performs to the manufacturer's specification.

1.16.3.2 Load methods, macros, libraries or other software as appropriate and test their functionality.

1.16.3.3 Verify that the instrument is fit for use by analyzing QA samples appropriate for that instrument. Ensure the instrument response is appropriate before placing the instrument in service for casework.

1.16.3.3.1 A summary of the verification shall be sent to the Chemistry Program Manager for approval prior to placing the replacement instrument into service.

1.16.3.3.2 Copy methods, macros and other information, as appropriate, to suitable long-term storage media as a back-up to the system.

1.16.3.3.3 Retain instrument verification documentation.

1.16.3.4 Ensure that examiners using the replacement instrument have been trained and authorized to use the instrumentation prior to use in casework.

1.16.3.4.1 The Chemistry Program Manager will either devise the training and competency check or the examiner responsible for the instrumentation will draft this for the Chemistry Program Manager's approval prior to proceeding.

1.16.4 New Instrument Installation and Validation

1.16.4.1 Obtain documentation from the instrument service representative that demonstrates that the instrument performs to the manufacturer's specification.

UNCONTROLLED COPY

1.16.4.2 The new instrument must be validated for use with samples similar to evidentiary material examined by Trace Evidence personnel.

1.16.4.3 The new instrument validation procedure will be determined in conjunction with the Chemistry Program Manager and will not proceed without the Chemistry Program Manager's approval.

1.16.5 Documentation

1.16.5.1 A log shall be maintained for each item of instrumentation and equipment (and its software) significant to the tests performed. These records shall include at a minimum:

- The identity of the item of equipment and its software
- The manufacturer's name, type identification and serial number or other unique identification (include DFS inventory number)
- Checks that the equipment complies with laboratory specifications
- The current location, where appropriate
- The manufacturer's instructions, if available, or reference their location
- Dates, results and copies of reports and certificates of all calibration, adjustments, acceptance criteria, and the due date of next calibration
- The maintenance plan, where appropriate, and maintenance carried out to date
- Any damage, malfunction, modification or repair to the equipment

COPYRIGHT © 2023 VIRGINIA DEPARTMENT OF FORENSIC SCIENCE

1.17 Evidence Storage

1.17.1 Evidence in Section storage in Section Administrative Custody (e.g., X/TE/ADM) is considered to be in long-term storage and must be stored properly sealed.

1.17.2 Evidence in an examiner's personal custody may either be stored in the examiner's personal evidence locker(s), in a room with restricted access (e.g., Scraping Room) or in Section storage.

1.17.2.1 Personal custody evidence stored in a Section storage area must be placed in an area clearly labeled as the personal custody of the particular examiner.

1.17.2.2 Whenever evidence is not actively being analyzed it must be sealed.

1.17.2.2.1 The time frame for evidence considered to be actively being analyzed should generally not exceed 30 days.

1.17.2.2.2 Evidence for a case waiting for instrument support results is considered to be actively being analyzed.

1.17.2.3 Evidence stored in a room with limited access does not have to be sealed.

1.17.2.3.1 Evidence does not need to be returned to a container but it must be protected.

UNCONTROLLED COPY

2 EXPLOSIVES

2.1 Analytical Approach

2.1.1 Perform a detailed physical exam. Based on these observations, the examiner will decide which analytical procedures will be used.

2.1.2 Record observations using one or more Explosives Worksheets, as applicable.

2.1.3 If unconsumed low explosives powder (black powder, black powder substitute, smokeless powder, flash powder) is present, proceed to Section 2.5, Analysis of Unconsumed Low Explosives Powder.

2.1.4 If unconsumed pyrotechnic (fireworks) powder is present follow the procedure for the analysis of unconsumed low explosives powder. IC may be added if necessary.

2.1.5 If no unconsumed powder is present/identified, proceed with extractions in the following order:

COPYRIGHT © 2023

2.1.5.1 Methanol extracts monomethylamine nitrate (MMAN). If water gel explosives are not suspected, this step may be omitted.

2.1.5.2 Ether extracts nitroglycerin (NG). Use only when nitroglycerin identification or comparison is needed for suspected double-base smokeless powders or NG-containing dynamite.

VIRGINIA DEPARTMENT OF FORENSIC SCIENCE

2.1.5.3 Acetone extracts most organic explosives to include nitrocellulose (NC).

2.1.5.4 Water extracts inorganic explosives.

2.1.5.5 Carbon disulfide (CS_2) or toluene extracts free sulfur. (Optional)

2.1.5.6 Allow the material being extracted to dry thoroughly between extractions.

2.1.5.7 Remove a portion of the water extract for IC analysis, if appropriate.

2.1.5.8 Perform microchemical and instrumental analysis on the extracts themselves or the dried residue from the extractions.

2.1.6 If a large amount of consumed powder residue is present, the examiner may choose to omit extractions and perform microchemical and appropriate instrumental analysis on the residue directly.

2.1.7 Any remaining extract and/or extracted residue is retained and returned in the item container corresponding to that particular item, unless otherwise indicated.

2.1.8 Microchemical results generally are noted on the Explosives Worksheet. Instrumental results are compared to known standards and/or standard data files, and both are retained in the case file.

2.1.9 Chemical reaction devices are a unique subset of improvised devices which are discussed in a separate section. (Section 2.3)

2.1.10 **Safety Considerations: The utmost caution is required when handling explosive materials and devices.**

2.1.10.1 Explosive devices must be dismantled or rendered safe before submission. If a live device is encountered, safely secure it and the laboratory area, notify the appropriate supervisory staff and call the submitting agency for immediate removal from the laboratory.

UNCONTROLLED COPY

2.1.10.2 If there are any questions regarding the stability of an explosive or its safety, notify the appropriate supervisory staff who may need to contact the nearest bomb disposal unit.

2.1.10.3 Analyze only small quantities of material.

2.1.10.4 Do not work near sources of heat or fire.

2.1.10.5 Do not subject material to violent shocks.

2.1.10.6 Store material away from heat, fire and other explosives or accelerants.

2.1.11 Minimum Standards and Controls

2.1.11.1 Reagent reliability checks will be performed using the known materials specified on the Reagent Log and recorded on the Explosives Worksheet.

2.1.11.2 Solvents used for extractions should be a high quality, low residue solvent (e.g., HPLC grade, OMNISOLV, OPTIMA).

COPYRIGHT © 2023

2.1.11.3 Solvent blanks must be run with each case extracted.

2.2 Physical Examination

VIRGINIA DEPARTMENT OF FORENSIC SCIENCE

2.2.1 Purpose

The purpose of the physical examination is to observe, document and recover materials for analysis. In addition to other materials, the search includes recovery of any unconsumed explosives powder. The information derived from this examination is necessary for determining the appropriate analytical procedure. It may also be beneficial to the submitting agency in providing investigative direction.

2.2.2 Analytical Procedures

2.2.2.1 If a fingerprint examination is requested, handle evidence appropriately.

2.2.2.2 Note type of material present, e.g., cardboard, plastic, paper, pipe, metal, etc.

2.2.2.3 Record approximate measurements of any devices.

2.2.2.4 Examine evidence for damage by violent force. If fragments are present, note size and shape. Note the presence of threaded fragments and end caps.

2.2.2.5 Determine the means of ignition, if possible, by examining evidence for the presence of fuse holes, fuse material, blasting caps and leg wires or electrical circuitry.

2.2.2.5.1 If unconsumed fuse is present, follow the procedure as in Section 2.4.

2.2.2.6 Using the stereomicroscope, and/or illuminated magnifier, search the device and/or fragments for particulate or powder material and preserve for further analysis.

2.2.2.7 Note any paint or markings. This can include letters, designs, or color-coded marks.

2.2.2.8 Record observations on worksheet or in notes.

2.2.3 References

2.2.3.1 Yallop, H.J., Explosion Investigation, The Forensic Science Society & Scottish Academic Press, Harrogate, England and Edinburgh, Scotland, 1980.

UNCONTROLLED COPY

2.2.3.2 Saferstein, Richard, Criminalistics: An Introduction to Forensic Science, ed. 5, Prentice-Hall, Inc.: Englewood Cliffs, NJ, 1995.

2.3 Analysis of Chemical Reaction Devices

2.3.1 Purpose

2.3.1.1 The purpose of analyzing chemical reaction devices is to determine the composition of the components of what is most commonly referred to as a bottle bomb.

2.3.1.2 Physical indications of a device that functioned in the absence of any chemical residue may indicate a dry ice (carbon dioxide) or liquid nitrogen bottle bomb.

2.3.2 Analytical Procedures

2.3.2.1 Note condition of the container, e.g., ruptured, distorted, capped, uncapped, and the amount and condition (e.g., reacted and/or unreacted strips, balls, twists) of any foil present.

2.3.2.2 Follow the General Chemical Procedure for Acids and Bases in Section 6.3.

2.3.2.3 Analyze recovered liquid or water extracts by IC and SEM-EDS.

2.3.2.3.1 Alternatively, the precipitate from the silver nitrate or barium chloride microchemical test may be dried and used for SEM-EDS. Also, include a silver nitrate or barium chloride reagent blank.

2.3.2.4 Analyze intact or partially consumed “aluminum” foil by SEM-EDS.

COPYRIGHT © 2023
VIRGINIA
DEPARTMENT
OF
FORENSIC SCIENCE

2.4 Analysis of Unconsumed Pyrotechnic Safety Fuse

2.4.1 Purpose

The purpose of analyzing unconsumed pyrotechnic safety fuse is to observe its physical properties and determine its functionality.

2.4.2 Analytical Procedures

2.4.2.1 Describe the physical appearance of the fuse, noting the color of its core, the twist of its fibers and the presence of an outer plastic layer and its color.

2.4.2.2 Measure and record the diameter of the fuse.

2.4.2.3 Perform an ignition test on the fuse (see Section 2.9).

2.5 Analysis of Unconsumed Low Explosive Powder

2.5.1 Purpose

The purpose of analyzing unconsumed low explosive powder is to determine its chemical composition for identification or classification purposes. This is generally applicable to black powder, black powder substitutes, smokeless powder, flash powders and pyrotechnic powders.

2.5.2 Analytical Procedures

UNCONTROLLED
COPY

2.5.2.1 If any unconsumed powder is recovered from an expended device, no extractions will be performed unless there is an indication of a mixture of filler materials from the examiner's observations or information derived from the RFLE.

2.5.2.2 Weigh the powder, unless trace amount. Alternatively, if there are only a few particles of unconsumed powder present, instead of weighing, count the particles and make a note of how many particles are consumed during analysis.

2.5.2.3 Describe the physical appearance of the powder.

2.5.2.4 Perform an ignition test on the powder, Section 2.9.

2.5.2.5 Perform microchemical tests on the powder, Section 2.8.

As a minimum:

- If suspected smokeless powder- DPA
- If suspected black powder or black powder substitute- DPA, Triphenylselenium chloride (while supplies last), Ascorbic Acid Test Strip
- If suspected flash powder or pyrotechnic mixture- DPA, Triphenylselenium Chloride (while supplies last)

COPYRIGHT © 2023
VIRGINIA DEPARTMENT OF FORENSIC SCIENCE

2.5.2.6 Perform FTIR instrumental analysis on the powder, utilizing one of the following sample preparation techniques:

- KBr
- The micro compression cell with diamond windows
- From acetone on KBr in transmittance mode
- ATR

2.5.2.7 In lieu of FTIR, XRD may be used for powders other than smokeless powder.

2.5.2.8 Perform SEM-EDS instrumental analysis on powders other than smokeless powder.

2.5.2.9 If the powder is smokeless powder and a comparison has been requested, determine if it is single or double base.

2.5.2.9.1 Take an amount of the powder particles (determined by examiner discretion, particle size, and/or total sample amount) and extract it with approximately 200 µL of methylene chloride or acetone for approximately 90 minutes, with occasional vortexing.

2.5.2.9.1.1 The amount of solvent used for extraction may be adjusted accordingly for small amounts of powder. For example, a volume of 50 µL of solvent may be more appropriate for the extraction of one or two particles.

2.5.2.9.2 Analyze the extract using GC-MS.

2.5.2.9.2.1 The **absence** of nitroglycerin in the extract combined with an FTIR spectrum consistent with smokeless powder identifies the powder as **single base**.

2.5.2.9.2.2 The **presence** of nitroglycerin in the extract combined with an FTIR spectrum consistent with smokeless powder identifies the powder as **double base**.

UNCONTROLLED COPY

2.5.2.10 If a comparison of powders is requested, additional steps are necessary.

2.5.2.10.1 Measurements of the dimensions of smokeless powders will be recorded. For other powders, determine the approximate grain size.

2.5.2.10.1.1 Measurements should be taken with a digital caliper.

2.5.2.10.1.2 Sample selection for measurement of disc and cylinder smokeless powders:

2.5.2.10.1.2.1 Measure the diameter and the length or thickness of at least 10 randomly chosen particles, if available.

2.5.2.10.1.2.2 The visually largest and smallest particles should be selectively measured in comparison to the average diameter or length (cylinders only) to establish a range of values.

2.5.2.10.1.2.3 The range of values established should be used for the comparison.

2.5.2.10.1.2.4 Questioned smokeless powder particles with an observed physical dimension range that overlaps with the observed physical dimension range of the known smokeless powder sample(s) are considered to be consistent in physical dimensions.

COPYRIGHT © 2023
VIRGINIA DEPARTMENT OF FORENSIC SCIENCE

2.5.2.10.1.3 Sample selection for measurement of ball, flattened-ball, and other types of smokeless powders:

2.5.2.10.1.3.1 Diameter and thickness of ball-type smokeless powders will vary somewhat within a similar lot. Ball-type powders include spherical, partially flattened, or mostly flattened particles. The diameter and thickness of other types of powders may vary considerably.

2.5.2.10.1.3.2 Measure the diameter and thickness (except for spherical balls) of at least 20 randomly selected particles, if available.

2.5.2.10.1.3.3 The visually largest and smallest particles should be selectively measured in comparison to the average diameter to establish a range of values.

2.5.2.10.1.3.4 The range of values established should be used for the comparison.

2.5.2.10.1.3.5 Questioned smokeless powder particles with an observed physical dimension range that overlaps with the observed physical dimension range of the known smokeless powder

UNCONTROLLED COPY

sample(s) are considered to be consistent in physical dimensions.

2.5.2.10.2 The comparison will include minimal microchemical tests and the ignition test as described in the above procedure.

2.5.2.10.3 If similar, GC-MS shall be used to compare patterns and the mass spectra of the components.

2.5.2.10.4 For other powders, a comparison of the results of IC, SEM-EDS and XRD testing should be conducted.

2.5.2.11 When smokeless powder particles are recovered from a disrupted device and a disruptor round is also submitted, use procedure as in Section 2.5.2.9.

2.5.3 References

COPYRIGHT © 2023

2.5.3.1 Parker, R.G., McOwen, J.M., and Cherolis, J.A., "Analysis of Explosives and Explosive Residues. Part 2: "Thin-Layer Chromatography", Journal of Forensic Sciences, Vol. 20, No. 1, April 1975, pp. 254-256.

2.6 Analysis of Intact High Explosives

VIRGINIA DEPARTMENT OF FORENSIC SCIENCE

2.6.1 Analytical Approach

2.6.1.1 While the Section receives some explosives evidence types on a fairly routine basis, others may require method development at the time the case is being worked. This section provides analysis schemes for some of those that the Section has analyzed with some regularity.

2.6.1.2 Good scientific principles and a logical analysis scheme are applied to those high explosives that have not been encountered before. The examiner, in consultation with the Section Supervisor, will devise an analytical approach that will take into consideration the type and quantity of evidence submitted and the case information received. Generally speaking, a visual macroscopic/microscopic examination will be performed (stereo, compound, comparison and/or polarizing microscopes) for color, texture, viscosity, morphology, optical properties and homogeneity.

2.6.1.3 The amount of sample will determine how the examiner proceeds. With a limited amount of sample, nondestructive testing is performed first. Solubility/miscibility tests with organic/inorganic and polar/nonpolar solvents (e.g., water, carbon disulfide, pentane, acetone, chloroform) should be conducted. The pH of water soluble/miscible samples should be taken using pH paper or a pH meter. Microchemical tests should be performed as indicators of a class of compounds present (e.g., for sulfates, chlorides, nitrates, sugars).

2.6.1.4 Necessary instrumentation is used to identify or to compare samples.

2.6.2 Emulsion Explosives

2.6.2.1 Purpose

The purpose of analyzing emulsion explosives is to determine their physical and chemical composition for identification purposes. Emulsion explosives are typically composed of inorganic oxidizers (ammonium nitrate, sodium nitrate, and/or sodium perchlorate), hydrocarbon oils or waxes, glass or plastic microballoon sensitizers, and an emulsifier. They can also contain NG, NC, EGDN, or aluminum.

UNCONTROLLED COPY

2.6.2.2 Analytical Procedures

2.6.2.2.1 Weigh the material.

2.6.2.2.2 Describe the physical appearance of the material.

2.6.2.2.3 As emulsion explosives typically contain an oil, rinse a small amount of the material with pentane, collecting both the pentane and the remaining material.

2.6.2.2.3.1 The pentane extract is analyzed via GC-MS.

2.6.2.2.4 Remaining material can be analyzed via microscope, microchemical tests, FTIR, XRD, SEM-EDS, and/or IC.

2.6.2.2.5 Any microballoons present are viewed on the polarized light microscope to determine if they are composed of glass or plastic.

COPYRIGHT © 2023

2.6.2.2.6 If the presence of NG or NC is suspected, rinse a small amount of the material with ether or acetone, respectively.

2.6.2.3 References

VIRGINIA DEPARTMENT OF FORENSIC SCIENCE

2.6.2.3.1 Nakamura, J., et al., The instrumental analysis of emulsion explosive residues. In: Midkiff, C. R., editor. Proceedings of the 5th International Symposium on the Analysis and Detection of Explosives; 1995 Dec 4-8; Washington, D.C. Washington, D.C.: Bureau of Alcohol, Tobacco, Firearms and Explosives; 1997.

2.6.2.3.2 Lau, K. L. M., et al., Pre-blast and post-blast examination of emulsion explosives. In: Midkiff, C. R., editor. Proceedings of the 5th International Symposium on the Analysis and Detection of Explosives; 1995 Dec 4-8; Washington, D.C. Washington, D.C.: Bureau of Alcohol, Tobacco, Firearms and Explosives; 1997.

2.6.2.3.3 Yinon, J. and Zitrin, S., Modern Methods & Applications In Analysis of Explosives, John Wiley & Sons, Inc.: NY, NY, 1993.

2.6.3 Composition C-4

2.6.3.1 Purpose

The purpose of analyzing Composition C-4 is to determine its chemical composition for identification purposes. C-4 is a white putty-like explosive used solely by the military. It contains the high explosive RDX, a plasticizer, a rubber binder, and motor oil.

2.6.3.2 Analytical Procedures

2.6.3.2.1 Weigh the material.

2.6.3.2.2 Describe the physical appearance of the material.

2.6.3.2.3 In a 50 mL beaker, add 10 mL of chloroform to approximately 50 mg of suspected C-4. Stir until the sample is completely dispersed. If the sample does not disperse, it is not C-4.

2.6.3.2.4 Filter the solution. Wash undissolved crystals (RDX) with 3 to 5 mL of chloroform. Examine the crystals using FTIR or XRD.

UNCONTROLLED COPY

2.6.3.2.5 Mix the clear filtrate into an equal volume of acetone. A white cloudy precipitate should develop.

2.6.3.2.6 In a 100 to 250 mL beaker, heat the acetone and chloroform mixture on low heat to promote evaporation. Just prior to the liquid reaching dryness, remove the mass of solid material that has agglomerated and dissolve it in a small amount of chloroform. The agglomeration contains the binder, and should be analyzed using FTIR.

2.6.3.2.7 After removing the solid from the beaker, allow what remains to fully dry. Add a few mLs of chloroform to the beaker and swirl. This will contain the plasticizer which should be analyzed using FTIR.

2.6.3.3 References

2.6.3.3.1 Keto, R. O., "Improved Method for the Analysis of the Military Explosive Composition C-4," *Journal of Forensic Sciences*, JFSCA, Vol. 31, No. 1, Jan. 1986, pp. 241-249.

COPYRIGHT © 2023

2.6.4 PETN (Pentaerythritol Tetranitrate)

2.6.4.1 Purpose

VIRGINIA DEPARTMENT OF FORENSIC SCIENCE

The purpose of analyzing PETN is to determine its chemical composition for identification purposes. PETN is a white crystalline solid having many military and some nonmilitary applications such as booster charges, demolition charges, and detonating cord, and as the main charge in blasting caps. PETN can be combined with plasticizers to form moldable sheets and blocks. The explosive Semtex is a plasticized mixture of PETN and RDX; Pentalite is a mixture of PETN and TNT.

2.6.4.2 Analytical Procedures

2.6.4.2.1 Weigh the powder, unless a trace amount or if contained in detonating cord.

2.6.4.2.2 Describe the physical appearance of the powder.

2.6.4.2.3 Perform microchemical tests on the powder. As a minimum:

- DPA
- Brucine

2.6.4.2.4 Perform FTIR instrumental analysis on the powder.

2.6.4.2.5 In lieu of FTIR, XRD may be used on unconsumed powder.

2.6.4.3 References

2.6.4.3.1 Yinon, Jehuda and Zitrin, Shimuel, Modern Methods & Applications In Analysis of Explosives, John Wiley & Sons, Inc.: NY, NY, 1993.

2.6.4.3.2 Beveridge, A. D. "Development in the Detection and Identification of Explosives Residues" ; Forensic Science Review, Volume 4, Number 1; June 1992.

2.6.4.3.3 Anger, V., and Feigl, F., Spot Tests in Inorganic Analysis, ed.6., Elsevier Publishing Company: Amsterdam, The Netherlands, 1972.

UNCONTROLLED COPY

2.6.4.3.4 Jungreis, Ervin, Spot Tests Analysis, John Wiley and Sons, Inc.:New York, New York, 1985.

2.6.4.3.5 Parker, R.G., Stephenson, M.O., McOwen, J.M., and Cherolis, J.A., "Analysis of Explosives and Explosive Residues. Part I: Chemical Tests", Journal of Forensic Sciences, Vol. 20, No. 1, January 1975, pp. 133-140.

2.7 Extractions

2.7.1 Methanol Extraction

2.7.1.1 Purpose

The purpose of a methanol extraction is to remove any monomethylamine nitrate present in the material being extracted.

2.7.1.2 Minimum Standards and Controls

COPYRIGHT © 2023

2.7.1.2.1 Previously cleaned glassware is rinsed with methanol.

2.7.1.2.2 A methanol blank must be run at the same time as the debris extract. The same volume of methanol used for extraction of the debris should be used for the blank and the blank should be reduced to the same volume. This blank is compared to the extract from the debris.

VIRGINIA DEPARTMENT OF FORENSIC SCIENCE

2.7.1.2.3 If the sample extract is to be filtered, the blank will be filtered in a like manner.

2.7.1.2.4 If the sample is to be evaporated, the blank is evaporated a like amount.

2.7.1.3 Analytical Procedures

2.7.1.3.1 Rinse the material being extracted with methanol in the areas where residue is observed/suspected.

2.7.1.3.2 Filter the methanol extract, if necessary, using filter paper or a Pasteur pipette with a plug of glass wool inserted into it.

2.7.1.3.3 Decant the methanol into an evaporating dish or beaker and concentrate to several milliliters. Sodium sulfate can be used to remove water from the sample if necessary.

2.7.1.3.4 Transfer to a labeled sample vial.

2.7.1.3.5 Analyze extract using the appropriate instrumentation.

2.7.2 Ether Extraction

2.7.2.1 Purpose

The purpose of an ether extraction is to remove any nitroglycerin from the material being extracted.

2.7.2.2 Safety Considerations

2.7.2.2.1 Ethyl ether is a very volatile and highly flammable liquid. Do not use near a flame.

UNCONTROLLED COPY

2.7.2.3 Minimum Standards and Controls

2.7.2.3.1 Ether is "washed" with deionized water (to remove any alcohol).

2.7.2.3.2 Previously cleaned glassware is rinsed with ether prior to use.

2.7.2.3.3 A solvent blank must be run at the same time as the debris extract. The same volume of ether used for extraction of the debris should be used for the blank and the blank should be reduced to the same volume. This blank is compared to the extract from the debris.

2.7.2.3.4 If the sample extract is to be filtered, the blank will be filtered in a like manner.

2.7.2.3.5 If the sample extract is to be evaporated, the blank will be evaporated a like amount.

2.7.2.4 Analytical Procedure

COPYRIGHT © 2023

2.7.2.4.1 Rinse the material being extracted with ether in the areas where residue is observed/suspected.

2.7.2.4.2 Filter the ether extract, if necessary, using filter paper or a Pasteur pipette with a plug of glass wool inserted into it.

VIRGINIA DEPARTMENT OF FORENSIC SCIENCE

2.7.2.4.3 Decant the ether into an evaporating dish or beaker and concentrate to several milliliters.

2.7.2.4.4 Transfer to a labeled sample vial.

2.7.2.4.5 Analyze extract using appropriate instrumentation.

2.7.3 Acetone Extraction

2.7.3.1 Purpose

The purpose of an acetone extraction is to remove any organic explosives, to include nitrocellulose, from the material being extracted. Note: Chloroform can be substituted for acetone on wet samples.

2.7.3.2 Safety Considerations

2.7.3.2.1 Acetone is a very volatile and highly flammable liquid. Do not use near a flame.

2.7.3.3 Minimum Standards and Controls

2.7.3.3.1 If necessary, filter through a drying agent (such as sodium sulfate) to remove excess water.

2.7.3.3.2 Previously cleaned glassware is rinsed with acetone prior to use.

2.7.3.3.3 A solvent blank must be run at the same time as the debris extract. The same volume of acetone used for extraction of the debris should be used for the blank and the blank should be reduced to the same volume. This blank is compared to the extract from the debris. (Note: It is not necessary to analyze this blank on FTIR unless the FTIR spectrum of the sample extract is consistent with containing explosives or explosive residue.)

UNCONTROLLED COPY

2.7.3.3.4 If the sample extract is to be filtered, the blank will be filtered in a like manner.

2.7.3.3.5 If the sample extract is to be evaporated, the blank will be evaporated a like amount.

2.7.3.4 Analytical Procedures

2.7.3.4.1 Rinse the material being extracted with acetone in the areas where residue is observed/suspected.

2.7.3.4.2 Filter the acetone extract, if necessary, using filter paper or a Pasteur pipette with a plug of glass wool inserted into it.

2.7.3.4.3 Decant the acetone into an evaporating dish or beaker and concentrate to several milliliters. Sodium sulfate can be used to remove water from the sample if necessary.

COPYRIGHT © 2023

2.7.3.4.4 Transfer to a labeled sample vial.

2.7.3.4.5 Perform microchemical analysis on acetone extract using the following reagents as a minimum:

VIRGINIA DEPARTMENT OF FORENSIC SCIENCE

- Diphenylamine (extract must be taken to dryness)
- Acetone and 2N NaOH
- Brucine (extract must be taken to dryness)

2.7.3.4.6 See Section 21.3, Chemicals and Reagents for reagent recipes.

2.7.3.4.7 Analyze extract using the appropriate instrumentation. If microchemical tests are negative, no further instrumental analysis is required.

2.7.3.5 Water Extraction

2.7.3.5.1 Purpose

The purpose of a water extraction is to remove any inorganic explosives or explosives residues or sugar(s) from the material being extracted.

2.7.3.5.2 Minimum Standards and Controls

2.7.3.5.2.1 Previously cleaned glassware is rinsed with deionized water prior to use.

2.7.3.5.2.2 A solvent blank must be run at the same time as the debris water extract. The same volume of water used for extraction of the debris should be used for the blank and the blank should be reduced to the same volume. This blank is compared to the extract from the debris.

2.7.3.5.2.3 If the sample extract is to be filtered, the blank will be filtered in a like manner.

2.7.3.5.2.4 If the sample extract is to be evaporated, the blank will be evaporated a like amount.

2.7.3.5.3 Analytical Procedures

UNCONTROLLED COPY

2.7.3.5.3.1 Rinse the material being extracted with DI water in the areas where residue is observed/suspected.

2.7.3.5.3.2 Filter the DI water extract, if necessary, using filter paper or a Pasteur pipette with a plug of glass wool inserted into it.

2.7.3.5.3.3 Concentrate sample and blank, if necessary.

2.7.3.5.3.4 A portion of the extract and an equal amount of the blank is evaporated to dryness.

2.7.3.5.3.5 Transfer the liquid extract to a labeled sample vial and any dried residue to a suitable container.

2.7.3.5.3.6 Perform microchemical analysis on extract using the following reagents as a minimum:

COPYRIGHT © 2023

- Diphenylamine (extract must be taken to dryness)
- Silver Nitrate plus NH4OH
- Triphenylselenium chloride (while supplies last)
- Barium Chloride plus HOAc
- Nessler's
- 1-Naphthol

VIRGINIA DEPARTMENT OF FORENSIC SCIENCE

2.7.3.5.3.7 See Section 21.3, Chemicals and Reagents for reagent recipes.

2.7.3.5.3.8 Analyze extracts using the appropriate instrumentation. If all microchemical tests are negative, the extracts may be analyzed by IC and SEM-EDS. If any microchemical tests are positive, the samples should be analyzed by IC, SEM-EDS, and XRD. If there is not sufficient dried residue from the extract for XRD analysis, the residue may be analyzed by FTIR.

2.7.3.6 Carbon Disulfide or Toluene Extraction

2.7.3.6.1 Purpose

The purpose of a carbon disulfide or toluene extraction is to remove free sulfur present in the material being extracted.

2.7.3.6.2 Minimum Standards and Controls

2.7.3.6.2.1 Previously cleaned glassware is rinsed with carbon disulfide or toluene prior to use.

2.7.3.6.2.2 If the sample extract is to be filtered, the blank will be filtered in a like manner.

2.7.3.6.2.3 A solvent blank of the same volume as the sample extract must also be evaporated to dryness. Residue present in the evaporated blank should be compared with the sample residue.

2.7.3.6.3 Analytical Procedures

2.7.3.6.3.1 Rinse the material being extracted with carbon disulfide or toluene in the areas where residue is observed/suspected.

UNCONTROLLED COPY

2.7.3.6.3.2 Filter the carbon disulfide or toluene extract, if necessary, using filter paper or a Pasteur pipette with a plug of glass wool inserted into it.

2.7.3.6.3.3 Evaporate to dryness.

2.7.3.6.3.4 Perform microchemical analysis on a portion of the residue using pyridine and NaOH.

2.7.3.6.3.5 If the microchemical test is positive, analyze the extract using SEM-EDS or XRD.

2.7.3.7 References

2.7.3.7.1 Saferstein, Richard, Criminalistics: An Introduction to Forensic Science, ed. 5, Prentice-Hall, Inc.: Englewood Cliffs, NJ, 1995.

2.7.3.7.2 Yinon, Jehuda and Zitrin, Shimuel, Modern Methods & Applications In Analysis of Explosives, John Wiley & Sons, Inc.: NY, NY, 1993.

2.7.3.7.3 Parker, R.G., "Analysis of Explosives and Explosive Residues. Part 3: "Monomethylamine Nitrate", Journal of Forensic Sciences, Vol. 20, No. 2, April 1975, pp. 257-260.

2.7.3.7.4 Midkiff, Charles R., "Arson and Explosive Investigation", Forensic Science Handbook, Volume 1, Second Edition, Pearson Education, Inc., 2002, pp. 510-524.

COPYRIGHT © 2023 VIRGINIA DEPARTMENT OF FORENSIC SCIENCE

2.8 Microchemical Spot Tests

2.8.1 Purpose

Microchemical spot tests are used as a screening method for compounds or ions commonly found in explosives or explosives residues.

2.8.2 Safety Considerations

2.8.2.1 Care should be taken to minimize exposure to these reagents. The process may be carried out in a well-ventilated area or by using a "Nederman" point-of-use vent, if one is available.

2.8.2.2 Keep the quantity of reagent used to a minimum.

2.8.3 Minimum Standards and Controls

2.8.3.1 Reagents are tested with appropriate controls when being used for casework.

2.8.3.2 Reagent blanks are run using those microchemical spot tests that gave a positive result for the sample.

2.8.3.2.1 If a color develops in the reagent blank, the test should be repeated.

2.8.3.2.1.1 If the results of the second blank are acceptable, all samples should be re-run.

2.8.3.2.1.2 If the results of the second blank are unacceptable the examiner should take steps to resolve the issue (e.g., replacing the solvent

UNCONTROLLED COPY

in the bottle, checking the reagents) prior to re-sampling and any further analysis.

2.8.4 Analytical Procedures

2.8.4.1 The test reagent should be added to a spot plate or test tube first, and then the sample added. This practice determines if the plate or tube was clean before the analysis.

2.8.4.1.1 If a reaction occurs prior to the addition of the sample, the plate or tube shall be discarded or cleaned before testing the sample.

2.8.4.2 Add the sample to be tested to the spot plate or test tube.

2.8.4.3 Record any reaction, or lack thereof, using a stereo microscope to observe any changes as necessary.

2.8.5 References

COPYRIGHT © 2023

2.8.5.1 Anger, V., and Feigl, F., Spot Tests in Inorganic Analysis, ed.6., Elsevier Publishing Company: Amsterdam, The Netherlands, 1972.

2.8.5.2 Jungreis, Ervin, Spot Tests Analysis, John Wiley and Sons, Inc.:New York, New York, 1985.

2.8.5.3 Parker, R.G., Stephenson, M.O., McOwen, J.M., and Cherolis, J.A., "Analysis of Explosives and Explosive Residues. Part I: Chemical Tests", Journal of Forensic Sciences, Vol. 20, No. 1, January 1975, pp. 133-140.

2.8.5.4 Yinon, Jehuda and Zitrin, Shimuel, Modern Methods & Applications In Analysis of Explosives, John Wiley & Sons, Inc.: NY, NY, 1993.

VIRGINIA DEPARTMENT OF FORENSIC SCIENCE

2.9 Ignition Test

2.9.1 Purpose

The purpose of the ignition test is to determine how the suspected explosive powder or unconsumed fuse behaves when ignited.

2.9.2 Safety Considerations

2.9.2.1 Only use a small amount of material.

2.9.3 Minimum Standards and Controls

2.9.3.1 The examiner should have observed ignition tests of known explosives and fuses prior to conducting the test on the case sample(s).

2.9.4 Analytical Procedures

2.9.4.1 For suspected explosive powder, a small portion of the sample may be held over a flame using a spatula or placed in a glass container and then ignited.

2.9.4.1.1 Alternatively, some of the sample may be placed in a Kimwipe and ignited in a glass container.

2.9.4.1.2 If trace amounts of sample are present, then the examiner may elect to not conduct this test.

UNCONTROLLED COPY

2.9.4.2 For unconsumed fuse, a small portion of the fuse may be held in a flame with forceps or ignited in a glass container.

2.9.4.2.1 If very small lengths of fuse are present, then the examiner may elect to not conduct this test.

2.9.4.3 The reaction as the flame contacts the sample is noted and recorded.

2.9.5 References

2.9.5.1 Yallop, H.J., Explosion Investigation, The Forensic Science Society & Scottish Academic Press, Harrogate, England and Edinburgh, Scotland, 1980.

2.9.5.2 Yinon, Jehuda and Zitrin, Shimuel, Modern Methods & Applications In Analysis of Explosives, John Wiley & Sons, Inc.: NY, NY, 1993.

2.10 Instrumental Analysis

COPYRIGHT © 2023

2.10.1 FTIR

The FTIR is used alone or in combination with other analytical techniques to identify chemical compounds and/or functional groups present in the explosives or explosives residues.

VIRGINIA DEPARTMENT OF FORENSIC SCIENCE

2.10.2 IC

The IC is used in combination with other analytical techniques to identify the sample cations and anions in solution.

2.10.3 XRD

The XRD may be used alone or in combination with other analytical techniques to identify chemical compounds present in powders exhibiting crystalline structures.

2.10.4 SEM-EDS

The SEM-EDS is used to identify the elemental composition of solid samples or dried extracts.

2.10.5 GC-MS

The GC-MS is used for the identification of compounds from their chemical structures.

2.10.6 References

2.10.6.1 Weiss, Joachim, Handbook of Ion Chromatography, Dionex Corporation: Sunnyvale, CA, 1986.

2.10.6.2 Yinon, Jehuda and Zitrin, Shimuel, Modern Methods & Applications In Analysis of Explosives, John Wiley & Sons, Inc.: NY, NY, 1993.

2.10.6.3 Yinon, Jehuda and Zitrin, Shimuel, The Analysis of Explosives, Pergamon Press Ltd., Oxford, England, 1981.

2.10.6.4 Gabriel, B.L., SEM: A User's Manual for Materials Science, American Society for Metals, Metals Park, OH, 1985.

2.11 Documentation

UNCONTROLLED COPY

As a minimum, each case file will include an Explosives Worksheet(s), appropriate instrument condition sheets and hard copies of instrumental data with associated standards and/or references.

2.11.1 Hard copies of IC data must note if sample has been diluted and by how much.

2.12 Report Wording

2.12.1 Methods: Techniques utilized in the analysis shall be listed on the report.

2.12.1.1 Solid material contained in Item ___ was examined visually and using stereomicroscopy and Scanning Electron Microscopy-Energy Dispersive X-Ray Spectrometry (SEM-EDS).

2.12.1.2 An extract of Item ___ was examined using a pH meter, microchemical tests, Ion Chromatography (IC) and Scanning Electron Microscopy-Energy Dispersive X-Ray Spectrometry (SEM-EDS).

2.12.1.3 Item ___ was examined using stereomicroscopy, solubility tests, microchemical tests, Fourier Transform Infrared Spectrophotometry (FTIR), Ion Chromatography (IC), Scanning Electron Microscopy-Energy Dispersive X-Ray Spectrometry (SEM-EDS) and X-Ray Diffraction (XRD).

2.12.1.4 The Item 1 and 2 bottles were examined visually.

COPYRIGHT © 2023 VIRGINIA DEPARTMENT OF FORENSIC SCIENCE

2.12.2 Results & Interpretations:

The following information should be included in the body of the report whenever possible:

2.12.2.1 A description of the (reconstructed) device. Include measurements, the initiating mechanism, any labeling or markings, the container's composition, any anti-personnel material, and a description of any other material attached or associated with the device.

2.12.2.1.1 The Item 1 (reconstructed) device consisted of a metal pipe approximately 10 inches in length with an outer diameter of approximately 1 inch. Black electrical tape was wrapped around the pipe's attached endcaps. An approximately 1/8 inch hole in the center of one of the endcaps contained an approximately 3 inch piece of green pyrotechnic safety fuse.

2.12.2.1.2 The Item 1 expended device contained an approximately 1/8 inch hole in the side of the length of the pipe which may have served _____.

2.12.2.1.2.1 If there is evidence of a fuse, complete the sentence with: may have served as a fuse hole.

2.12.2.1.2.2 If there is no indication of a fuse, complete the sentence with: may have served to accommodate the source of ignition.

2.12.2.1.3 Other device measurement examples:

2.12.2.1.3.1 Approximately 3 inches in length and ½ inch outer diameter.

2.12.2.1.3.2 The approximate measurements of the pipe were 3 inches in length and ½ inch in diameter.

2.12.2.1.3.3 The expended device was constructed of a 3/4 inch pipe approximately 12 inches in length.

2.12.2.2 A description of the explosive filler:

UNCONTROLLED COPY

2.12.2.2.1 The Item _____ silver-grey powder was identified as flash powder.

2.12.2.2.2 Particles recovered from Item _____ were identified as a black powder substitute physically and chemically consistent with Pyrodex®.

2.12.2.2.3 Particles recovered from Item _____ were identified as (single/double base) smokeless powder.

2.12.2.2.4 Powder recovered from Item _____ was physically and chemically consistent with a pyrotechnic powder (a pyrotechnic mixture).

2.12.2.2.5 An extract of the Item _____ pipe was chemically consistent with that expected from deflagrated black powder.

2.12.2.2.6 An extract of Item ____ was chemically indicative of (black powder, black powder substitute, flash powder, smokeless powder, etc.). Indicative means that some of the data corresponds to an explosive or explosive residue but, due to low concentration, sample condition, or other factors, a more definitive conclusion could not be reached.

COPYRIGHT © 2023 VIRGINIA DEPARTMENT OF FORENSIC SCIENCE

2.12.2.3 A description of how the explosive filler would react if properly confined and/or ignited. **This statement is not necessary when the device has functioned or when the evidence submitted is intact ammunition from a convicted felon.**

2.12.2.3.1 Properly confined and ignited _____ (black powder, black powder substitute, flash powder, smokeless powder, etc.) will explode.

2.12.3 When no explosives are identified, the following statement should be used:

2.12.3.1 No explosives or explosives residues were identified in the Item ___ extracts.

2.12.4 For chemical reaction devices:

2.12.4.1 Unexpended device:

- Item ____ consisted of an intact, capped plastic bottle commercially labeled _____ containing liquid. The liquid was physically and chemically consistent with containing hydrochloric acid and aluminum (or hydrochloric acid and aluminum foil).
- Item ____ consisted of a disrupted, capped plastic bottle commercially labeled _____. (The liquid was…The extract was…)
- It should be noted that in the correct proportions, a mixture of hydrochloric acid and aluminum foil properly confined in a plastic bottle can produce a sufficient amount of gas to cause the bottle to explode.

2.12.4.2 Expended device:

- Item ____ consisted of a capped, ruptured, and distorted plastic bottle commercially labeled ____.
- The Item _____ materials were physically and chemically consistent with those expected from an expended chemical reaction device employing a capped plastic bottle containing hydrochloric acid and aluminum (or hydrochloric acid and aluminum foil).

2.12.4.3 Uncapped device:

UNCONTROLLED COPY

- The Item ____ materials were physically and chemically consistent with those expected from an uncapped chemical reaction device employing a plastic bottle containing hydrochloric acid and aluminum (aluminum foil). It should be noted that in the correct proportions, a mixture of hydrochloric acid and aluminum (aluminum foil) properly confined in a plastic bottle can produce a sufficient amount of gas to cause the bottle to explode.

2.12.4.4 Physical and chemical evidence of a chemical reaction bomb with no bottle submitted:

- The Item _____ material was physically and chemically consistent with that expected from an expended chemical reaction device containing hydrochloric acid and aluminum (aluminum foil). It should be noted that a mixture of hydrochloric acid and aluminum (aluminum foil) properly confined in a plastic bottle can produce a sufficient amount of gas to cause the bottle to explode.

2.12.4.5 For non-aqueous chemicals such as "crystal" drain cleaners:

COPYRIGHT © 2023

- It should be noted that a properly confined mixture of sodium hydroxide, water, and aluminum (aluminum foil) can produce a sufficient amount of gas to cause the bottle to explode.

VIRGINIA DEPARTMENT OF FORENSIC SCIENCE

2.12.4.6 For mixtures indicative of containing pool chlorinators:

- White residue present in the Item _____ bottle was chemically indicative of, but may not be limited to, the expected reaction product of a mixture of a calcium hypochlorite-based granular chlorinator, sugar, and water.

- It should be noted that a properly confined mixture of a calcium hypochlorite-based granular chlorinator, sugar, and water can produce a sufficient amount of gas to cause the bottle to explode.

2.12.5 Hoax devices:

2.12.5.1 Item _____ was physically consistent with a (disrupted) hoax explosive device.

2.12.6 For dry ice or liquid nitrogen bombs:

- The Item 1 expended device was physically and chemically indicative of, but may not be limited to, that expected from a dry ice or liquid nitrogen physical reaction device.

- It should be noted that properly confined dry ice, a solid form of carbon dioxide, or liquid nitrogen can produce a sufficient amount of gas to cause the bottle to explode.

2.12.7 1/16 inch, 3/32 inch or 1/8 inch typical green or red fuse material will be referred to as: pyrotechnic safety fuse.

2.12.7.1 For unexpended fuse:

Item _____ consisted of green pyrotechnic safety fuse, approximately 4 ½ inches in length.

2.12.7.2 For expended fuse:

Item _____ was consistent in physical properties with an expended (green, red) pyrotechnic safety fuse and was approximately ¾ inch in length.

UNCONTROLLED COPY

2.12.7.3 For a fuse that does not function:

Item _____ was physically consistent with pyrotechnic safety fuse but did not function.

2.12.8 When a smokeless powder comparison has been performed, the Certificate of Analysis must contain the results of the comparison, an appropriate conclusion statement, the assigned level of association, and a "Terminology Key for Comparative Examinations". For associations, an additional explanation to justify the chosen level of association shall also be included.

- Particles removed from Item _ could not be associated with the Item _ smokeless powder particles due to differences in physical (or chemical) properties (**Exclusion/Elimination**).

- The Item _ powder was consistent in physical and chemical properties with the Item _ powder. Based on the particles examined, it was concluded that Item _ originated from either Item _ or another source with the same physical and chemical properties (**Level III – Association with Discriminating Characteristics**). This type of conclusion was reached because other smokeless powder produced with the same properties would also be indistinguishable from this smokeless powder. It should be noted that the techniques used in this comparative analysis can typically distinguish different smokeless powders.

COPYRIGHT © 2023

2.12.9 When specifying commercial labeling, include at a minimum the product name and size of container, when possible.

VIRGINIA DEPARTMENT OF FORENSIC SCIENCE

2.12.10 If specifying a brand of black powder substitute in a report, the following superscripts are to be used:

Pyrodex®
Clean Shot Powder™
Black Canyon Powder™
Clear Shot Powder™
Golden Powder™
Black Mag Powder™
Triple Se7en®

2.12.11 Full Report Wording Examples:

2.12.11.1 Example 1

Item 1	Distorted plastic bottle
Item 2	Foil
Item 3	Distorted plastic bottle
Item 4	Distorted plastic bottle

METHODS:

The Item 1 bottle was examined visually and an extract of the bottle was examined using a pH meter, microchemical tests, Ion Chromatography (IC), and Scanning Electron Microscopy-Energy Dispersive X-Ray Spectrometry (SEM-EDS). The Item 2 foil was examined visually and using SEM-EDS.

RESULTS & INTERPRETATIONS:

Item 1 consisted of a capped, ruptured, and distorted plastic bottle commercially labeled "Nestle® Pure Life® PURIFIED WATER…", ".5 L…".

The Item 1 and 2 materials were physically and chemically consistent with those expected from an expended chemical reaction device employing a capped plastic bottle containing hydrochloric acid and aluminum foil.

UNCONTROLLED COPY

The Item 3 and 4 bottles were examined visually and each was physically consistent with that expected from an expended chemical reaction device.

The disposition of the evidence and the results of other requested examinations are the subject of another report.

2.12.11.2 Example 2

Item 1 Box of forty-two 9mm rounds

METHODS:

Item 1 was examined visually and powder removed from one of each of the two different cartridge types was examined using stereomicroscopy, an ignition test, microchemical tests, and Fourier Transform Infrared Spectrophotometry (FTIR).

COPYRIGHT © 2023

RESULTS & INTERPRETATIONS:

Item 1 consisted of a box of ammunition commercially labeled "INDEPENDENCE™…9mm LUGER…" containing 42 intact cartridges, of which there were two different commercially labeled types: "*I*" and "WIN". The powder removed from each of the two different cartridge types was identified as smokeless gun powder.

VIRGINIA DEPARTMENT OF FORENSIC SCIENCE

The evidence is being returned to the Eastern Laboratory where it will be available for personal pickup.

2.12.11.3 Example 3

Item 5 Swab taken from inside of mailbox

METHODS:

Item 5 was examined using stereomicroscopy, solubility tests, microchemical tests, Fourier Transform Infrared Spectrophotometry (FTIR), Ion Chromatography (IC), and Scanning Electron Microscopy-Energy Dispersive X-Ray Spectrometry (SEM-EDS).

RESULTS & INTERPRETATIONS:

An extract of the Item 5 swab was chemically consistent with that expected from a deflagrated black powder substitute such as Pyrodex®.

The evidence is being retained for personal pickup.

UNCONTROLLED COPY

3 FIBERS

3.1 Analytical Approach

3.1.1 List and describe each textile item. Include the label information as to fiber content, brand or manufacturer, manufacturer's numbers such as the RN# or WPL# and the size. Include a brief description of any design, logos or lettering present. Note the condition of the Item – intact, buttons missing, apparent rips or tears, etc. Supporting photographic documentation may be included.

3.1.2 The physical, chemical and optical properties of known and/or questioned fibers are noted and recorded. Examples of these properties are as follows: Physical – color (physical and instrumental using the microspectrophotometer), cross-section, diameter, delustrant, surface characteristics; Chemical - microchemical tests, FTIR; Optical - relative birefringence, sign of elongation, extinction and fluorescence. Relative refractive index is optional.

3.1.3 If a sufficient quantity of questioned fibers exists, then the known and questioned fibers will be compared and the properties noted in a side-by-side examination as follows: microchemical tests, cross-sectioning, polarized light microscopy (PLM), comparison microscopy, fluorescence microscopy, microspectrophotometry (MSP) and Fourier Transform Infrared Spectrophotometry (FTIR). The order of these exams and any additional testing is left to the discretion of the examiner and based on the evidence at hand.

COPYRIGHT © 2023 VIRGINIA DEPARTMENT OF FORENSIC SCIENCE

3.1.4 The exams used for natural fiber types would generally mirror those for synthetic fibers with the exception of instrumental analysis. Some natural fibers such as cotton, wool, and rabbit hair can be identified based solely upon their microscopic characteristics.

3.1.5 Minimum Standards and Controls

Any mounting media with a stated expiration date will not automatically be discarded after the stated date. As long as the mounting media has not yellowed and continues to "flow" properly, as determined by the examiner, then it may continue to be used.

3.1.6 References

3.1.6.1 Robertson, J. and Grieve, M., Forensic Examination of Fibers, 2nd edition, Taylor and Francis, Inc., Philadelphia, PA, 1999.

3.2 Recovery of Hairs and/or Fibers

3.2.1 Purpose

To examine evidence to locate, recover and preserve hairs/fibers for identification and/or comparison purposes.

3.2.2 Summary

3.2.2.1 Generally speaking, submitting the article(s) of evidence to the laboratory for the examiner to process is the best approach to the recovery of hairs and/or fibers. There are instances where this is not practical or possible, such as recovering hairs and/or fibers from wall-to-wall carpeting, a large piece of furniture, or a vehicle. In these instances, the recovery may be accomplished at the scene and the recovered hairs and/or fibers submitted for examination.

3.2.2.2 The order of preference for the recovery of hairs and/or fibers is manual removal with forceps followed by taping with Post-it type notes or another low tack tape. Gentle scraping may be necessary in certain instances. Vacuuming is rarely, if ever, performed because the debris recovered represents far more than recent hair and/or fiber transfers.

UNCONTROLLED COPY

3.2.3 Minimum Standards and Control

3.2.3.1 The examiner shall change the examination paper between victim and suspect or scene exhibits. The examiner may change the paper between multiple victim, suspect or scene items, as necessary.

3.2.3.2 There should be only one exhibit opened at a time, unless two separate areas exist for this purpose.

3.2.3.3 The examiner shall change gloves and clean their tools between examining the evidence from the victim and the evidence from the suspect.

3.2.3.4 If possible, the victim's evidence and suspect's evidence should be examined in separate rooms. If this is not possible, then the separation of victim and suspect evidence in time and/or space will be necessary. Document in case file notes.

3.2.3.5 Use separate laboratory coats and evidence collection rooms, if available, for examining materials from victim and suspect to prevent possible cross-transfer contamination.

3.2.3.6 Avoid drafts around the examination area.

3.2.4 Analytical Procedure

COPYRIGHT © 2023
VIRGINIA DEPARTMENT OF FORENSIC SCIENCE

3.2.4.1 Spread a clean piece of paper on the examination surface.

3.2.4.2 Examine each item of evidence visually or with the aid of an illuminated magnifier, UV light or stereomicroscope.

3.2.4.2.1 If the item being examined contains hairs and/or fibers that are readily visible, collect these hairs and/or fibers with forceps. As hairs and/or fibers are collected, they should be placed in glassine packets or affixed to Post-it type notes.

3.2.4.2.2 Take care with bulky items which require repositioning on the examination table, to avoid the loss of hairs and/or fibers in the repositioning process.

3.2.4.3 Post-it type notes or another low tack tape may be used to recover hairs and/or fibers. The adhesive surface is placed on the item being examined and then pulled away. Hairs and/or fibers will adhere to the adhesive on the tape.

3.2.4.3.1 This method may be especially useful on large items or dark-colored items on which hairs and fibers of interest may be difficult to see.

3.2.4.3.2 High tack tape can be used to ensure complete recovery of hairs but only for knit articles such as hats, caps, masks, and scarves. If fibers are probative to the case, a high tack tape must not be used.

3.2.4.3.2.1 The only high tack tape approved for use is clear packing tape.

3.2.4.4 Scraping is generally discouraged as a method of collection for hairs and/or fibers. If scraping is necessary, the item to be examined is suspended above the examination surface and gently scraped with a spatula. Scraping in a downward direction allows surface hairs and/or fibers to fall onto the examination paper for collection.

3.3 Fiber Identification

3.3.1 Purpose

UNCONTROLLED COPY

The purpose of fiber identification is to identify animal and vegetable fibers and to identify manufactured fibers as to their generic class.

3.3.2 Safety Considerations

3.3.2.1 The use of xylene substitute, Permount, or Pro-Texx to mount the fibers requires caution. The process may be carried out in a well ventilated area or by using a "Nederman" point-of-use vent, if one is available.

3.3.2.2 Concentrated acids, solvents, and reagent chemicals (e.g., formaldehyde) should be used in a well-ventilated area with proper precautions being exercised to minimize skin contact.

3.3.3 Minimum Standards and Controls

3.3.3.1 Reference collections of animal, vegetable and manufactured fibers mounted on glass microscope slides as well as those not mounted are available. These reference collections can be useful to the examiner when identifying generic class of manufactured fibers as well as preparation of cross-sections for plant fiber identification.

COPYRIGHT © 2023

3.3.3.2 A reference collection of FTIR spectra of known synthetic fiber generic classes and sub-classes is available. The resolution of the known fiber spectra must be equal to or better than that of the sample spectra.

VIRGINIA DEPARTMENT OF FORENSIC SCIENCE

3.3.3.3 Reagents shall be prepared in accordance with the QA/QC protocol (See Section 21.3) and reagent reliability checks will be recorded.

3.3.4 Analytical Procedures

3.3.4.1 Mount the specimen on a slide (using water, glycerin, xylene substitute, Permount, or Pro-Texx).

3.3.4.2 Using a compound microscope, examine the specimen. If the specimen can be identified at this point (e.g., cotton fibers or rabbit hair) it is not necessary to continue.

3.3.4.3 Cross-sections may be prepared as needed for vegetable fibers. This is typically accomplished using the Jolliff slide procedure as follows:

3.3.4.3.1 Jolliff slides are black plastic approximately 0.4 mm thick with holes 0.5 mm in diameter.

3.3.4.3.2 A needle threader or a looped strong, thin wire is inserted through a Jolliff slide hole.

3.3.4.3.3 Packing fibers are placed within the needle threader. Packing fibers are those with a simple cross-section and contrasting color. The packing fibers must fill the hole tightly enough so that they do not pull out when cut and they do not form a bulge in the plastic when drawn.

3.3.4.3.4 A few fibers to be sectioned are selected. A greater number of fibers to be sectioned require a corresponding decrease in the amount of packing fibers used.

3.3.4.3.5 The fiber(s) to be sectioned is placed in the bundle of packing fibers and pulled just enough so that the fiber(s) of interest is drawn through creating a U-shaped loop.

UNCONTROLLED COPY

3.3.4.3.6 The bundle of fibers is cut flush on both sides of the Jolliff slide with a new, single-edged razor blade.

3.3.4.3.7 Compare the cross-sections with known reference cross-sections, if necessary, via the comparison microscope to assist in making identifications.

3.3.4.4 The dry twist test may assist in differentiating vegetable fibers as follows:

3.3.4.4.1 Soak fiber(s) in water for a few minutes until thoroughly wet.

3.3.4.4.2 Remove a single fiber, holding it at one end with forceps.

3.3.4.4.3 With the free end toward the observer, hold the fiber over a hot surface, such as a hot plate.

3.3.4.4.4 Observe whether the fiber rotates in a clockwise or counterclockwise direction (or if the direction of twist is inconclusive) as the fiber dries.

COPYRIGHT © 2023

3.3.4.4.5 Repeat test with different fibers, if possible, to ensure reproducibility.

3.3.4.4.6 Refer to the table of Direction of Twist for Common Natural Fibers.

VIRGINIA DEPARTMENT OF FORENSIC SCIENCE

DIRECTION OF TWIST FOR COMMON NATURAL FIBERS [3.3.5.9]

Clockwise	Counterclockwise	Alternating Directions	Clockwise or Indecisive	Variable or None
Flax Ramie Kapok (Java) Nettle fiber	Hemp Jute Manila Sisal Henequen	Cotton	Coir	Kapok (Indian)

3.3.4.5 For manufactured and select other fibers, observe the optical properties of the fibers using the polarized light microscope. Refer to the table of Optical Properties of Common Fibers.

OPTICAL PROPERTIES OF COMMON FIBERS [3.3.5.9]

Low Birefringence:
Triacetate (+); n's ~ 1.469
Modacrylics (+ or -); n's ~1.53 & 1.54
Cellulose Acetate (+); n's ~ 1.474
Acrylics (-); n's ~ 1.51

Moderate Birefringence:
Viscose Rayon (+); n's ~ 1.55 & 1.52
Cotton (+); no extinction; n's ~ 1.58 & 1.53
Wool & other animals (+); n's ~ 1.56 & 1.55
Silk (+); n's ~ 1.59 & 1.54
Linen & other bast fibers (+); n's ~ 1.59 & 1.53

High Birefringence:
Nylon (+); n's ~ 1.57 & 1.52
Polyester (+); n's ~ 1.70 & 1.53
Nomex (+); n's ~ 1.75 & 1.67
Kevlar (+); n's ~ 2.35 & 1.64

3.3.4.6 For vegetable fibers, the Herzog Test may assist in identifying the fiber type. The Herzog Test is performed using the polarized light microscope with the fibers mounted on a slide in a suitable medium. Under crossed polars, align the fiber approximately north-south, or parallel to the vibration direction of the analyzer. The fiber ultimate should be the darkest in this

UNCONTROLLED COPY

orientation. Insert the full-wave plate and observe the color of the fiber. Note: This test should be repeated for color reproducibility and only completed on ultimates not bundles.

Expected results: [3.3.5.4]

Flax and Ramie = Yellow (sometimes orange or pink)
Hemp, Jute, Sisal, and Manila = Blue

3.3.4.7 For manufactured fibers, obtain an FTIR spectrum. This is most typically accomplished using the microcompression cell with diamond windows. Compare the obtained spectrum with reference spectra of synthetic fibers.

3.3.4.8 Generally, the solubility of a fiber in specific liquids can assist in generic class identification. Determine the solubility of the fibers in m-cresol, DMF, concentrated hydrochloric acid, concentrated nitric acid, 75% sulfuric acid, LeRosen, and others such as HFIP, as needed. Also, note any color reactions that take place. The chemicals and reagents used are selected at the discretion of the examiner and should be based on the results of the other examinations. Refer to the table of Solubilities of Common Fibers.

COPYRIGHT © 2023

Key to solubility reactions:

S = Soluble/Disintegrates (fades, splinters, or breaks apart and goes into solution)

P = Partially Soluble (not all portions of a fiber are soluble)

I = Insoluble (no reaction)

VIRGINIA DEPARTMENT OF FORENSIC SCIENCE

SOLUBILITES OF COMMON FIBERS [3.3.5.7]

	ACT S/T	ACR	MOD D/V	NYL	NYT	OLE PE/PP	POL	RAY	SPA	CO/ FL	SI	WO
m-Cresol	S/S	I	I/I	S	I	I/I	I	I	I	I	I	I
DMF	S/S	P/I	S/S	I	S	I/I	I	I	I	I	I	I
Conc. HCl	S/P	I	I/I	S	I	I/I	I	I	I	I	S	I
Conc. HNO_3	S/S	S	I/-	S	S	I/I	I	I	P/S	I	P/S	P/I
75% H_2SO_4	S/S		I/I	S	I	I/I	I	S	P/S	S	P/S	I
LeRosen				S		I/I	S					
HFIP	S/S			S		I/I	S	I	S		I	

ACT S/T = acetate secondary/triacetate
ACR = acrylic
MOD D/V = modacrylic dynel/verel
NYL = nylon
NYT = nytril
OLE PE/PP = olefin polyethylene/polypropylene
POL = polyester
RAY = rayon
SPA = spandex
CO/FL = cotton/flax
SI = silk
WO = wool

3.3.4.9 Identifying Characteristics of Some of the More Common Animal Fibers (Hair and Silk) Used in Textiles [3.3.5.9]

WOOL – faint to pronounced scales, medulla may or may not be present, usually no pigment or centric pigment distribution, diameter range 10-90 µm. Sources may include sheep, goat, cashmere, mohair, camel, alpaca, llama and vicuna.

RABBIT - uniserial to multiserial medulla

UNCONTROLLED COPY

SILK (BOMBYX MORI) - twin continuous filaments, cemented together, degummed filaments are fine, uniform, with no visible internal structure, triangular cross section with rounded corners

SILK (TUSSAH) - brownish, coarse, ribbon-like with striated and granular structure, wedge-shaped x-section

3.3.4.10 Identifying Characteristics of Some Common Plant Fibers [3.3.5.9 and 3.3.5.10]

COTTON - looks like twisted, flattened tubes (convoluted), very irregular in appearance, remains bright in all orientations between crossed polars

Mercerized Cotton: not as twisted, somewhat featureless, but still not regular

KAPOK - smooth, cylindrical, hollow, thin-walled, frequently bent over on itself, tapers to a point with other end having a bulbous base with annular or reticular markings; x-section is oval or circular with a wide lumen

COPYRIGHT © 2023

FLAX - (linen) small, regular lumen, characteristic x-shaped cross markings; usually exists as ultimates; x-section is polygonal with thick cell walls surrounding a narrow/small lumen.

VIRGINIA DEPARTMENT OF FORENSIC SCIENCE

JUTE - large circular or elliptical lumen with constrictions; occasional nodes and markings, usually in bundles; x-section is polygonal with sharp defined angles and thick cell walls

HEMP - lumen not always evident (broad and flat when seen); many cross-markings; x-section is polygonal with thick cell walls

RAMIE - flat undeveloped lumen with radial cracks through thick cell walls; x-section is irregularly oval to polygonal, many characteristic cross-markings, many ridges and striations

SISAL - well defined fairly large lumen; spiral elements present; x-section is irregularly oval to polygonal; acicular crystal present; stegmata present

ABACA - (manila) lumen typically defined, round, and uniform in diameter; stegmata present; x-section is irregularly oval to polygonal with rounded corners and thin cell walls

COIR - very short fibers, surface covered with stegmata in longitudinal rows; x-section is thick cell walls surrounding an irregularly indented lumen outline

3.3.5 References

3.3.5.1 Appleyard, H.M., Guide To The Identification of Animal Fibers; Wool Industries Research Association: Leeds, England 1960.

3.3.5.2 Deedrick, Douglas W. and Koch, Sandra L., “Microscopy of Hair Part I: A Practical Guide and Manual for Human Hairs”, *Forensic Science Communications*, Volume 6, Number 1, January 2004.

3.3.5.3 Deedrick, Douglas W. and Koch, Sandra L., “Microscopy of Hair Part II: A Practical Guide and Manual for Animal Hairs”, *Forensic Science Communications*, Volume 6, Number 3, July 2004.

3.3.5.4 Forensic Polarized Light Microscopy (Training Materials), McCrone Research Institute, April 2008.

3.3.5.5 Gaudette, B.D. In *Forensic Science Handbook*; Saferstein, R., Ed.; Prentice Hall: Englewood Cliffs, N.J., 1988; Vol. II, Chapter 5.

UNCONTROLLED COPY

3.3.5.6 Goodway, Martha, "Fiber Identification in Practice", *Journal of the American Institute for Conservation*, Vol. 26, No.1, Article 3, 1987, pages 27-44.

3.3.5.7 Hall, D.M. Practical Fiber Identification. First edition, 1976.

3.3.5.8 Hicks, John, Microscopy of Hair: A Practical Guide and Manual, FBI, Issue 2, January 1977.

3.3.5.9 Introduction to Hairs and Fibers (2007 Training Materials), F.B.I..

3.3.5.10 Mauersberger, H.R., ed. Matthews' Textile Fibers: Their physical, microscopic, and chemical properties. Sixth Edition 1954.

3.3.5.11 Microtrace, Course notes from Forensic Fiber Identification course given at Texas Department of Public Safety, June 1998.

3.3.5.12 Palenik, S. and Fitzsimons, C., "Forensic Microscopy, Fiber Cross-Sections: Part II", *Microscope*, 38, 1990 pp. 313-320.

3.3.5.13 Scientific Working Group for Materials Analysis, "Forensic Fiber Examination Guidelines", *Forensic Science Communications*, Vol. 1, No. 1, April 1999.

3.3.5.14 The Textile Institute. Identification of Textile Materials, Seventh Edition, Manchester, 1985.

COPYRIGHT © 2023 VIRGINIA DEPARTMENT OF FORENSIC SCIENCE

3.4 Fiber Comparison

3.4.1 Purpose

To determine if fibers from different sources could have had a common origin. Special considerations that should be noted when performing fiber comparisons:

3.4.1.1 The comparison of questioned fibers with fibers from a known source is performed in every step of the examination once the questioned fibers are recovered and the known target fibers are established.

3.4.1.2 The examiner may approach the fiber comparison by attempting to show that the samples are different. The failure to detect any meaningful differences, after exhausting the methodology available to the examiner, results in the conclusion that the K (known) and Q (questioned) fibers could have had a common origin.

3.4.1.3 When sample size is limited, destructive testing is generally performed after all non-destructive testing is complete.

3.4.2 Safety Considerations

3.4.2.1 Do not look directly into the fluorescence source.

3.4.2.2 Do not look directly into the FTIR laser source.

3.4.2.3 The MCT detector for the FTIR microscope accessory must be cooled with liquid nitrogen. Insulated gloves and safety glasses shall be worn when filling the transport Dewar as well as the instrument reservoir.

3.4.3 Minimum Standards and Controls

3.4.3.1 Extreme caution must be used when handling known and questioned fibers to avoid any possibility for cross-contamination.

UNCONTROLLED COPY

3.4.3.2 Use the same mounting media for known and questioned fibers.

3.4.3.3 The known and questioned fibers shall be examined at the same time, in a side-by-side fashion. The fiber worksheet(s) shall be used to record all positive, probative comparisons.

3.4.3.4 The comparison microscope data of all positive, probative associations will be verified by a second qualified fiber examiner. The original fiber worksheet(s) will be initialed and dated by the second examiner in the space labeled "verification" which will denote agreement with the notes. The verification includes the K and Q comparison of those features in the highlighted areas on the worksheet(s).

3.4.3.5 Reagents shall be prepared in accordance with the QA/QC protocol (See Section 21.3) and reagent reliability checks will be recorded.

3.4.4 Analytical Procedures

COPYRIGHT © 2023

3.4.4.1 Polarized Light Microscopy

3.4.4.1.1 Prepare temporary or permanent mounts of the known and questioned fibers.

3.4.4.1.1.1 Pro-Texx (RI = 1.495 ± 0.005), Permount (RI = 1.525), Norland Optical Adhesive 60® (RI = 1.56), xylene substitute (RI = Unk), or glycerin (RI = 1.47).

VIRGINIA DEPARTMENT OF FORENSIC SCIENCE

3.4.4.1.2 View the known and questioned fibers using a polarized comparison microscope. Using a fiber worksheet, record the physical and optical properties. These will include at a minimum: color, diameter, delustrant, extinction, relative birefringence, sign of elongation and optical cross-section.

3.4.4.1.2.1 Relative birefringence is determined by viewing the retardation colors using a full wave plate, a 4 order Berek compensator and/or a 20 order Berek compensator.

3.4.4.1.2.2 The relative refractive index may be noted. This is accomplished by observation of the Becke line movement with respect to an appropriate mounting medium. The mounting medium of choice shall be noted on the fiber worksheet.

3.4.4.1.3 Refer to the table of Optical Properties of Common Fibers. (See ¶ 3.3.4.5)

3.4.4.1.4 Comparisons should be performed side-by-side. Any major discrepancies between the K and Q samples are reason for elimination.

3.4.4.2 Fluorescence Microscopy

Some fibers fluoresce when exposed to different wavelengths of light. Of those fibers, the observed color and intensity of emission under different excitation wavelengths are noted.

3.4.4.2.1 These observations are generally conducted following the observation of physical and optical properties.

3.4.4.2.2 Certain mounting media will fluoresce. Non-fluorescing media should be used to achieve optimum contrast with the background.

3.4.4.2.3 Fluorescence QC procedure:

UNCONTROLLED COPY

3.4.4.2.3.1 Perform fluorescence QC check prior to using the fluorescence microscope for casework. Use the fluorescence QC check sample and record observations on the fluorescence worksheet. If the fluorescence QC check fails to produce acceptable colors or intensity, troubleshoot the fluorescence microscope as appropriate and repeat the QC check. If the QC check continues to fail, take the fluorescence microscope out of service until the problem is resolved.

3.4.4.2.3.2 Fluorescence cubes to be used are WU (wide UV – range 330 – 385nm), WBV (wide blue violet – range 400 – 440nm), WB (wide blue – range 450 – 480nm) and WG (wide green – range 510 – 550nm). Record observations on a fluorescence worksheet.

3.4.4.2.4 Differences may be seen between the fluorescence of known and questioned samples if one of the samples has been subjected to different conditions than the other sample.

COPYRIGHT © 2023

3.4.4.2.5 Caution should be taken when eliminating samples based on fluorescence data alone. This is because fluorescence can be caused by optical brighteners, detergents, bleaching agents, dyes, the chemical structures themselves or other additives. Detailed notes explaining the basis for the elimination are a must. While fluorescence is an optical property, eliminations based on fluorescence will be reported as “due to differences in fluorescence”.

VIRGINIA DEPARTMENT OF FORENSIC SCIENCE

3.4.4.3 Comparison Microscope

3.4.4.3.1 Observe known and questioned fibers in temporary or permanent mounts with the comparison microscope.

3.4.4.3.2 Record whether the known and questioned fibers are consistent or not.

3.4.4.4 Microspectrophotometry (MSP)

3.4.4.4.1 Minimum Standards and Controls

Ensure that the QC has been performed.

3.4.4.4.2 Analytical Procedures

3.4.4.4.2.1 Range of colors, color intensity and distribution as well as cross-sectional shape should be considered when determining the number of spectra to be collected for the comparison of the known and questioned fibers.

3.4.4.4.2.2 Comparisons shall only be performed between spectra taken at the same magnification. Comparison should be performed by overlaying the known and questioned spectra. Any major discrepancies between the two are reason for elimination.

3.4.4.4.2.3 The average of the known and questioned spectra as well as the individual lamp spectra may be printed and compared. However, individual spectra will always be included in the case file.

3.4.4.5 FTIR

UNCONTROLLED COPY

This instrumental technique is generally not applicable for vegetable fibers or animal hair fibers.

3.4.4.5.1 Minimum Standards and Controls

3.4.4.5.1.1 Ensure that the QC has been performed.

3.4.4.5.2 Analytical Procedures

3.4.4.5.2.1 Obtain spectra of the known and questioned fibers either by rolling the fibers flat and placing them on a KBr window or by using the microcompression cell with diamond windows.

3.4.4.5.2.2 The spectra for the known and questioned are compared by overlaying the known and questioned spectra.

3.4.4.5.2.3 Any major discrepancies between the two are reason for elimination. It may be necessary to sample several known or questioned fibers or to take several spectra along the length of a given fiber to determine the reproducibility of the spectra.

COPYRIGHT © 2023

3.4.4.6 Cross-sections

VIRGINIA DEPARTMENT OF FORENSIC SCIENCE

Frequently the cross-section of a fiber can be determined from the longitudinal view, also known as optical cross-sectioning. This may be the only technique available for cross-sections if the questioned fiber is too short.

3.4.4.6.1 Prepare cross-sections of the known and questioned fibers, treating both the known and questioned fibers in the same manner, using one of the following methods:

3.4.4.6.1.1 Polyethylene sheets - Single fibers are placed between two plastic sheets. The plastic “sandwich” is placed on a glass microscope slide, another slide or a cover slip is placed over the plastic “sandwich” and this is then transferred to a hot plate set on low. Some pressure may need to be applied as the plastic melts around the fiber. A new single-edged razor blade or scalpel blade may be used to slice thin cross-sections of the sandwiched fiber. The remaining portion of fiber is easily removed by cutting and lifting away the plastic sheets.

3.4.4.6.1.2 Super Glue®- Place the fibers to be cross-sectioned on a microscope slide. Add enough glue to cover the fibers. After fully drying, use a new single-edged razor blade or scalpel blade to slice thin cross-sections of the fiber.

3.4.4.6.1.3 Norland Optical Adhesive 60® - Place the fibers to be cross-sectioned on a microscope slide. Add enough adhesive to cover the fibers. Expose to long wave ultraviolet light (320-400nm) for at least 10 minutes, or until completely cured. A new single-edged razor blade or scalpel blade may be used to slice thin cross-sections of the fiber.

3.4.4.6.1.4 Norland/plastic pipette – Grasp the tip of the pipette and draw it into a narrower cylinder. Insert the fibers to be cross-sectioned into the narrowed pipette tip. Using capillary action, draw Norland Optical Adhesive 60® into the pipette tip. Place tip with

UNCONTROLLED COPY

fiber and adhesive on microscope slide. Expose to long wave ultraviolet light (320-400nm) for at least 10 minutes, or until completely cured. A new single-edged razor blade or scalpel blade may be used to slice thin cross-sections of the pipette and fiber.

3.4.4.6.1.5 Jolliff slide method as previously described. (See ¶ 3.3.4.3)

3.4.4.6.2 Compare the prepared cross-sections using the comparison microscope and record observations on fiber worksheet. Any major discrepancies are reason for elimination.

3.4.4.7 Microchemical Tests

3.4.4.7.1 The chemicals and reagents used are at the discretion of the examiner and should be based on results from other examinations and sample condition and quantity.

COPYRIGHT © 2023

3.4.4.7.2 Known and questioned fibers are observed side-by-side for a comparison of any reactions (color changes, solubility, etc.).

3.4.4.7.3 Generally, the solubility of a fiber in specific liquids can assist in generic class identification.

VIRGINIA DEPARTMENT OF FORENSIC SCIENCE

3.4.4.7.4 Microchemical test reagents that are used are: m-cresol, DMF, concentrated hydrochloric acid, concentrated nitric acid, 75% sulfuric acid, LeRosen, and others such as HFIP, as needed.

3.4.4.7.4.1 For those reagents where the QC check does not give an acceptable result, repeat the QC check with fresh reagent until an acceptable result is achieved.

3.4.4.7.5 Cut small portions of the known and questioned fibers and place them in welled spot plates or on a microscope slide under a cover slip.

3.4.4.7.6 Add a drop or two of the microchemical test reagent. Observe reactions with the aid of the stereomicroscope and record observations using the fiber microchemical worksheet. Any major discrepancies are reason for elimination.

3.4.4.7.7 Refer to the table of Solubilities of Common Fibers. (See ¶ 3.3.4.8)

3.4.4.8 References

3.4.4.8.1 Robertson, J. and Grieve, M., Forensic Examination of Fibers, 2nd Edition, Taylor and Francis, Inc., Philadelphia, PA, 1999.

3.4.4.8.2 Scientific Working Group for Materials Analysis, "Forensic Fiber Examination Guidelines", *Forensic Science Communications*, Vol. 1, No. 1, April 1999.

3.5 Fabric Construction

3.5.1 Analytical Approach

3.5.1.1 The examiner is typically requested to compare a questioned sample to a known fabric/carpet sample. Instead of a Q vs. K comparison, the examiner may be requested to conduct a determination if Q and K could have been constructed by the same manufacturer.

UNCONTROLLED COPY

3.5.1.2 The questioned and known evidence should not be brought into direct contact until after a preliminary examination of both items has been completed separately.

3.5.1.3 The examiner first conducts a macroscopic examination of the fabric/carpet evidence. If appropriate, a fracture match examination can be conducted.

3.5.1.4 Preliminary examination should include but is not limited to noting size, shape, and condition (stains, patterns, buttons, cut/torn/damaged edges, etc.).

3.5.1.5 The examiner can continue analyzing the fabric/carpet evidence describing the construction and then comparing the fibers composing the fabric/carpet following the fiber comparison protocol.

3.5.2 Macroscopic/Microscopic Examination

3.5.2.1 Purpose

COPYRIGHT © 2023

To examine submitted fabric/carpet evidence on a macroscopic and microscopic scale, noting physical properties regarding its construction, generally as the first step in the characterization and comparison of known and questioned fabric/carpet samples.

3.5.2.2 Analytical Procedures

VIRGINIA DEPARTMENT OF FORENSIC SCIENCE

3.5.2.2.1 Thoroughly clean the examination area prior to the evidence being retrieved.

3.5.2.2.2 The sample is examined, macroscopically and/or microscopically, to observe and record the physical construction properties to include, but not be limited to, the following, when applicable:

- Construction (woven, knit, nonwoven)
- Yarns per inch in warp and weft direction
- Yarn twist (s or z)
- Staple or filament fibers in yarns
- Color of fabric, yarns, fibers, or backing
- Number of plies
- Ply twist
- Carpet pile (loops, cut, etc.)

3.5.2.3 If any meaningful differences are observed between the questioned and known fabric/carpet constructions, the examiner can discontinue the analysis.

3.5.2.4 When no meaningful differences are observed, the fibers within the fabric/carpet are further identified and compared following the fiber comparison protocol.

3.5.2.5 References

3.5.2.5.1 "Forensic Fiber Examination Guidelines: Fabrics and Cordage," SWGMAT, *JASTEE*, Vol. 6(1), 2015, pp. 83-90.

3.5.2.5.2 Forensic Examination of Fibres, 2nd Edition, J. Robertson and M. Grieve, eds., Taylor and Francis, London, 1999.

3.5.2.5.3 Introduction to Hairs and Fibers (Training Materials), F.B.I., March 2007.

3.5.2.5.4 Standard Guide for Forensic Examination of Fabrics and Cordage: ASTM Method E 2225-10.

UNCONTROLLED COPY

3.5.2.5.5 Textile Science, K. L. Hatch, West Publishing Company, New York, 1993.

3.6 Ropes and Cordage

3.6.1 Analytical Approach

3.6.1.1 The examiner is typically requested to compare a questioned sample to a known rope or cordage sample.

3.6.1.2 The questioned and known evidence should not be brought into direct contact until after a preliminary examination of both items has been completed separately.

3.6.1.3 The examiner first conducts a macroscopic examination of the cordage evidence. If appropriate, a fracture match examination can be conducted.

3.6.1.4 Preliminary examination should include, but is not limited to, noting size, shape, and condition (stains, knots, fraying/cut/torn/damaged ends, etc.).

COPYRIGHT © 2023

3.6.1.5 All knots should be left intact.

3.6.1.6 The examiner can continue analyzing the cordage evidence describing the construction and then comparing the fibers composing the cordage following the fiber comparison protocol.

VIRGINIA DEPARTMENT OF FORENSIC SCIENCE

3.6.2 Macroscopic/Microscopic Examination

3.6.2.1 Purpose

To examine submitted cordage evidence on a macroscopic and microscopic scale, noting physical properties regarding its construction, generally as the first step in the characterization and comparison of known and questioned cordage samples.

3.6.2.2 Analytical Procedures

3.6.2.2.1 Thoroughly clean the examination area prior to the evidence being retrieved.

3.6.2.2.2 The sample is examined, macroscopically and/or microscopically, to observe and record the physical construction properties to include, but not be limited to, the following, when applicable:

- Color(s)
- Diameter
- Condition of the ends (e.g., cut, torn, crushed, burned)
- Presence of a coating
- Presence of a tracer
- Core
- Twisted, braided, non-twisted
- Direction of twist
- Number of strands
- Crowns or turns per inch
- Length of lay
- Staple or filament fibers
- Strand direction of twist
- Number of plies or braids
- Twist of each ply or braid
- Crowns or turns per inch of each ply or braid
- Number of filaments in each ply or braid

UNCONTROLLED COPY

3.6.3 If any meaningful differences are observed between the questioned and known cordage constructions, the examiner can discontinue the analysis.

3.6.4 When no meaningful differences are observed, the fibers within the cordage are further identified and compared following the fiber comparison protocol.

3.6.5 References

3.6.5.1 "Forensic Fiber Examination Guidelines: Fabrics and Cordage," SWGMAT, *JASTEE*, Vol. 6(1), 2015, pp. 83-90.

3.6.5.2 Forensic Examination of Fibres, 2nd Edition, J. Robertson and M. Grieve, eds., Taylor and Francis, London, 1999.

3.6.5.3 Introduction to Hairs and Fibers (Training Materials), F.B.I., March 2007.

COPYRIGHT © 2023

3.6.5.4 "Recognition, identification and comparison of rope and twine," Wiggins, K.G., *Science & Justice*, 35(1), 1995, pp. 53-58.

3.6.5.5 Standard Guide for Forensic Examination of Fabrics and Cordage: ASTM Method E 2225-10.

VIRGINIA DEPARTMENT OF FORENSIC SCIENCE

3.7 Documentation

3.7.1 The examiner's notes will include a description of each textile item (if applicable), the questioned fiber(s), including color, approximate amount and how the fiber was analyzed (e.g., microscopic examination, cross-section, dry twist test etc.). Approximate length will be noted when applicable.

3.7.2 All worksheets, FTIR spectra with appropriate reference spectra, and MSP data will be included, as appropriate.

3.8 Report Wording

3.8.1 Methods: Techniques utilized in the analysis shall be listed on the report.

3.8.1.1 Fibers composing Item ____ were examined using stereomicroscopy, comparison microscopy, fluorescence microscopy, polarized light microscopy (PLM), microchemical tests, Fourier Transform Infrared Spectrophotometry (FTIR), and Microspectrophotometry (MSP).

3.8.1.2 Items ___ and ____ were examined visually and using stereomicroscopy. Fibers composing Items ____ and ____ were further examined using comparison microscopy, fluorescence microscopy, polarized light microscopy (PLM), microchemical tests, and Microspectrophotometry (MSP).

3.8.2 For Fiber Type Identifications:

3.8.2.1 Questioned manufactured fibers that require only identification are generally reported as belonging to one of the following generic classes or subclasses:

- Acetate
- Acrylic
- Aramid
  - Kevlar
  - Nomex
- Chlorofiber
- Modacrylic

UNCONTROLLED COPY

- Nylon
- Olefin
  - Polyethylene
  - Polypropylene
- Polyester
- Regenerated Cellulose (including, but not limited to, bamboo, rayon, Tencel®, and lyocell)
- Saran
- Spandex
- Triacetate
- Vinal
- Vinyon

3.8.2.2 Color will be reported and cross-sectional shape or end use may be reported as appropriate.

3.8.2.2.1 Based on the fibers examined, Item _____ contained red, trilobal nylon fibers that may be found in, but are not limited to, some carpets.

COPYRIGHT © 2023

3.8.2.2.2 The Item _____ _____ (shirt, pants, etc.) fibers were composed of colorless cotton. Colorless cotton fibers do not possess a sufficient number of individual characteristics for meaningful comparison.

VIRGINIA DEPARTMENT OF FORENSIC SCIENCE

3.8.2.3 If foreign fibers were recovered and knowns are being requested for comparison purposes the report will generally read:

Foreign (color and/or type) fibers (or "Foreign fibers of various colors and types") were recovered from Item(s) _____ which were suitable for comparison purposes. If a possible source of fibers is located, resubmit Item(s) along with the possible source for comparison.

3.8.3 For Comparisons:

3.8.3.1 The results of the comparison, an appropriate conclusion statement, and level of association shall be reported with a "Terminology Key for Comparative Examinations" on the Certificate of Analysis.

3.8.3.2 If the compared samples are found to <u>PHYSICALLY FIT</u>:

Examination and comparison of Items 1 and 2 revealed corresponding edges and features. These Items physically fit to form one continuous piece when corresponding edges and/or features are re-aligned in a specific sequence. It is therefore concluded that Items 1 and 2 were, at one time, a portion of a single unit (**Level I - Physical/Fracture Match**).

3.8.3.3 If the compared samples are <u>CONSISTENT/SIMILAR</u>:

3.8.3.3.1 Generally, textile materials are mass-produced and it is not possible to state that a fiber originated from a particular garment to the exclusion of all other textile materials having the same color and type of fibers in their construction.

3.8.3.3.2 For associations, additional explanation to justify the chosen level of association shall also be included.

3.8.3.3.3 RESULTS:

3.8.3.3.3.1 The use of the term "consistent" must be accompanied by what the fabrics or fibers were "consistent" in (e.g., physical, chemical, and optical properties). This term is generally used when there are no

UNCONTROLLED COPY

unexplainable differences in the testing conducted on the known and questioned samples.

- The red nylon (color and/or type) fiber in Item _____ was consistent in physical, chemical and optical properties with the fibers composing the Item _____ blanket.

- The Item 1 and 2 washcloths were consistent in color and overall construction and were composed of cotton fibers which were consistent in physical, chemical and optical properties.

- Items 1, 2, and 3 were each twine samples composed of jute fibers which were consistent in physical, chemical and optical properties with the jute fibers composing Item 4.

3.8.3.3.3.2 It is recognized that there may be instances when, based on the data, the term "similar" may be more appropriately substituted for "consistent". The reason for the use of the term "similar" in lieu of "consistent" must be explained in the report.

COPYRIGHT © 2023

3.8.3.3.3.3 There may be an occasion when these terms are used in the same sentence:

VIRGINIA DEPARTMENT OF FORENSIC SCIENCE

The green polyester fibers recovered from Item 1 and composing Item 2 were consistent in optical and chemical properties, and similar in physical properties because of slight differences in striations.

3.8.3.3.4 CONCLUSIONS:

3.8.3.3.4.1 Based on the fibers examined, it was concluded that the Item _____ red nylon (color and/or type) fiber originated from either the Item _____ blanket (known) or another source composed of fibers with the same physical, chemical and optical properties.

3.8.3.3.4.2 Based on the fabric and fibers examined, it was concluded that the Item 1 and 2 towels could have originated from the same manufacturer.

3.8.3.3.4.3 Based on the fabric and fibers examined, it was concluded that Item 1 originated from either the source represented by Item 2 or a different source manufactured in the same manner.

3.8.3.3.4.4 Based on the cordage and fibers examined, it was concluded that these twine samples originated from either the Item 4 roll of twine or another roll of twine manufactured in the same manner.

3.8.3.3.5 Examples:

3.8.3.3.5.1 One (1) singed, purple polyester fiber was recovered from the Item 1 shirt which was consistent with the purple polyester fibers composing the singed Item 2 blanket in physical, chemical, and optical properties. Based on the fibers examined, it was concluded that the Item 1 fiber originated from either the Item 2 blanket or another source composed of fibers with the same physical, chemical, and optical properties (**Level II – Association with Highly Discriminating Characteristics**). This type of conclusion

UNCONTROLLED COPY

was reached because no differences were observed between the fibers and because of the damage to both Items.

3.8.3.3.5.2 Blue acrylic fibers were recovered from the Item 2 pants which were consistent in physical, chemical and optical properties with the blue acrylic fibers composing the Item 1 sweater. Based on the fibers examined, it was concluded that these recovered Item 2 blue acrylic fibers originated from either the Item 1 sweater or another source composed of fibers with the same physical, chemical and optical properties (**Level III – Association with Discriminating Characteristics**). This type of conclusion was reached because other textiles containing fibers produced with the same properties (type, color, microscopic characteristics, etc.) would also be indistinguishable from these fibers. It should be noted that the techniques used in this comparative analysis can typically distinguish different fibers.

COPYRIGHT © 2023

3.8.3.3.5.3 The Item 1 and 2 blue and white ropes were consistent in color and overall construction and were composed of nylon fibers which were consistent in physical, chemical, and optical properties. Based on the fibers examined, it was concluded that the Item 1 piece of rope originated from either the source represented by Item 2 or a different source manufactured in the same manner (**Level III – Association with Discriminating Characteristics**). This type of conclusion was reached because other cordage produced with the same properties (type, color, microscopic characteristics, etc.) would also be indistinguishable from these ropes. It should be noted that the techniques used in this comparative analysis can typically distinguish different ropes and fibers.

VIRGINIA DEPARTMENT OF FORENSIC SCIENCE

3.8.3.4 If the compared samples are <u>INCONCLUSIVE</u>:

3.8.3.4.1 The brown jute fibers recovered from Item 2 and composing the Item 3 mat possess similar characteristics but also exhibit some differences. It cannot be determined whether these differences were due to the environmental exposure of the Item 2 fibers or because the Item 2 fibers were from a different source other than Item 3. Therefore, based on the fibers examined, no meaningful conclusion could be reached (**Inconclusive**).

3.8.3.5 If the compared samples are <u>DIFFERENT</u>, the reason for elimination (differences in color, physical properties, optical properties, chemical properties, and/or fluorescence) shall be included in the conclusion:

3.8.3.5.1 Based on the fibers examined, the Item 1 fibers could not be associated with the Item 14 fibers due to differences in _____ (state the reason for the differences) (**Exclusion/Elimination**).

3.8.3.5.2 Based on the fibers examined, the _____ (color and/or type) fibers composing Item 6 could not be associated with the fibers composing Item 7 due to differences in _____ (**Exclusion/Elimination**).

3.8.3.5.3 While generally not applicable, there may be an instance where an "Exclusion with Limitations" conclusion is drawn. In such instances, explanation and justification of such a conclusion is necessary.

3.8.4 Generally, in instances where two or more associations are being reported (e.g., cross transfers or multiple transfers), each association and appropriate level should be reported separately. An additional

UNCONTROLLED COPY

"Combined Conclusion" may be included which considers the overall significance of transferred materials, however, this will not include an assigned level.

3.8.4.1 It is considered unlikely/remote/extremely remote that the interchange of fibers (or materials) described above occurred in any manner other than the contact of the two garments (fabrics, objects).

3.8.4.2 Given the associations described above, it is considered unlikely/remote/extremely remote that Item ___ originated from any source other than the source represented by Item ___.

3.8.4.3 Report Wording Example:

Foreign fibers of various colors and types were recovered from the Item 2 trunk lining. Dark blue acrylic fibers, light blue acrylic fibers, black polyester fibers, and white spandex fibers were recovered from the Item 2 trunk lining that were consistent with four of the five fiber types composing the Item 5 pants in respective physical, chemical, and optical properties. Based on the fibers examined, it was concluded that these Item 2 dark blue acrylic fibers, light blue acrylic fibers, black polyester fibers, and white spandex fibers originated from either the Item 5 pants or another source of fibers with the same respective physical, chemical, and optical properties (**Level III – Association with Discriminating Characteristics**). This type of conclusion was reached for each fiber type compared because other textiles like Item 5 were produced and fibers produced with the same properties (type, color, microscopic characteristics, etc.) from other sources would also be indistinguishable from these fibers. It should be noted that the techniques used in this comparative analysis can typically distinguish different fibers.

COPYRIGHT © 2023 VIRGINIA DEPARTMENT OF FORENSIC SCIENCE

Foreign black polyester fibers were recovered from the Item 5 pants that were consistent in physical, chemical, and optical properties with the black polyester fibers composing the Item 2 trunk lining. Based on the fibers examined, it was concluded that these Item 5 black polyester fibers originated from either the Item 2 trunk lining or another source of fibers with the same physical, chemical, and optical properties (**Level III – Association with Discriminating Characteristics**). This type of conclusion was reached because other textiles like Item 2 were produced and fibers produced with the same properties (type, color, microscopic characteristics, etc.) from other sources would also be indistinguishable from these fibers. It should be noted that the techniques used in this comparative analysis can typically distinguish different fibers.

COMBINED CONCLUSION:

It is considered remote that the interchange of fibers described above occurred in any manner other than the contact of these two textiles.

3.8.5 Full Report Wording Examples – Fibers:

3.8.5.1 Example 1

Item 6	Orange shirt
Item 12	Orange fibers

METHODS:

Items 6 and 12 were examined visually. Item 12 and a portion from Item 6 were also examined using stereomicroscopy. Fibers composing Items 6 and 12 were further examined using comparison microscopy, polarized light microscopy (PLM), fluorescence microscopy, microchemical tests, and Microspectrophotometry (MSP).

RESULTS AND INTERPRETATIONS:

UNCONTROLLED COPY

The light orange cotton fibers and yarns present in Item 12 were consistent in physical, chemical, and optical properties with the fibers and yarns composing the Item 6 shirt. Based on the fibers and yarns examined, it was concluded that these Item 12 light orange cotton fibers and yarns originated from either Item 6 or another source composed of fibers and yarns with the same physical, chemical, and optical properties (**Level III – Association with Discriminating Characteristics**). This type of conclusion was reached because other textiles like Item 6 were produced and fibers and yarns produced with the same properties (type, color, microscopic characteristics, etc.) from other sources would also be indistinguishable from these fibers and yarns. It should be noted that the techniques used in this comparative analysis can typically distinguish different fibers and yarns.

TERMINOLOGY KEY FOR COMPARATIVE EXAMINATIONS:

(Key with Levels)

(Dates of testing and supporting examination documentation paragraph)

COPYRIGHT © 2023

(Evidence disposition statement)

3.8.5.2 Example 2

VIRGINIA DEPARTMENT OF FORENSIC SCIENCE

Item 1 Fibers from victim's hand
Item 2 White blanket from bed

METHODS:

Items 1 and 2 were examined visually. Fibers from Items 1 and 2 were examined using stereomicroscopy, comparison microscopy, polarized light microscopy (PLM), fluorescence microscopy, Microspectrophotometry (MSP), Fourier Transform Infrared Spectrophotometry (FTIR), and microchemical tests.

RESULTS AND INTERPRETATIONS:

White polyester fibers in Item 1 were consistent in physical, chemical, and optical properties with the fibers composing the Item 2 blanket. Based on the fibers examined, it was concluded that these Item 1 white polyester fibers originated from either the Item 2 blanket or another source composed of fibers with the same physical, chemical, and optical properties (**Level IV – Association with Limitations**). This type of conclusion was reached because of the limited number of distinguishing characteristics available for comparison between the Item 1 and 2 fibers as well as the prevalence of this fiber type.

TERMINOLOGY KEY FOR COMPARATIVE EXAMINATIONS:

(Key with Levels)

(Dates of testing and supporting examination documentation paragraph)

(Evidence disposition statement)

UNCONTROLLED COPY

4 FIRE DEBRIS

4.1 Analytical Approach

4.1.1 Generate one or more Fire Debris Worksheets.

4.1.2 Briefly open each container, make a gross visual inspection and record a description of the contents. Do not intentionally smell the contents of the container while observing the contents but do make a notation of any unavoidable odor from the contents.

4.1.3 If a nonaqueous liquid is present, test to confirm its nonaqueous nature. A nonaqueous liquid will be immiscible with water and will be noted on the worksheet. A nonaqueous liquid or appropriate water miscible liquid (e.g., alcohols) may be injected directly into the gas chromatograph – mass spectrometer (GC-MS). See Direct Injection procedure, ¶ 4.2. The term "aqueous" applies to those liquids that are miscible with water and will be noted on the worksheet. If not appropriate for direct injection, an aqueous liquid will either be analyzed by the Passive Adsorption-Elution procedure (¶ 4.5) or extracted first by Ambient Headspace analysis (¶ 4.3) followed by the Solvent Extraction procedure (¶ 4.4).

COPYRIGHT © 2023

4.1.4 It may be necessary to determine if an unknown liquid sustains a flame. This determination would only be necessary when a non-routine or otherwise unusual liquid is encountered. Attempt to ignite a small amount of the liquid on a watch glass in a hood and record the results on the Fire Debris Worksheet.

VIRGINIA DEPARTMENT OF FORENSIC SCIENCE

4.1.5 If the sample contains enough ignitable liquid to give an unavoidable strong odor, resists heating (e.g., insulation), or when a distinction is needed between Kerosene and Diesel Fuel, then solvent extraction should be employed. Unless the sample contains enough ignitable liquid to give an unavoidable strong odor or is not packaged in an airtight container, a headspace extraction should be performed before the solvent extraction.

4.1.6 If a latent prints examination is requested on a bottle or other container and no nonaqueous liquid is present, a solvent extraction of the interior may be performed using caution while wearing gloves or holding the item with tongs or forceps.

4.1.7 Any sample extract vials generated during analysis are returned in the can, or other container, corresponding to their particular item. Any deviation is noted on the Fire Debris Worksheet to include in which container vials that contain combined extracts are being returned.

4.1.8 The GC-MS Total Ion Chromatogram (TIC) for case samples is compared to the GC-MS TIC for known reference samples according to retention times and overall patterns. When extracted ion chromatography (EIC), also known as mass spectral ion profiling (MSIP), is applied to case samples and to known reference samples, the patterns that are generated are compared.

4.1.9 If data generated from a Passive Adsorption-Elution extraction contains peaks/pattern that may be consistent with a heavy petroleum distillate, then a follow-up Solvent Extraction may be performed.

4.1.10 For the analysis of vegetable oil based products, see section 6.11.

4.1.11 Safety Considerations

Intentional inhalation of the odor of the contents of items for fire debris analysis is prohibited due to the potential health concerns related to this activity.

4.1.12 Minimum Standards and Controls

4.1.12.1 The processing of questioned and known evidence (or samples suspected to contain large amounts of ignitable liquids) must be separated in time and/or space to prevent incidental contamination.

UNCONTROLLED COPY

4.1.12.2 Carbon disulfide (CS_2) - Each new bottle or lot of carbon disulfide must be tested prior to its use in casework. Approximately 5 ml of the new solvent is evaporated to a few drops. 2 µl of this evaporated solvent is injected into the GC-MS. If the resulting data has no significant peaks which interfere with the analysis, then the solvent is available for use in casework. The data labeling shall include, at a minimum, the manufacturer, lot number, start volume, end volume, the suitability results, the evaluator's initials, and the date of evaluation.

4.1.12.3 Pentane (C_5) - Each new bottle or lot of pentane must be tested prior to its use in casework. Approximately 500 ml of the new solvent is evaporated to a few drops. 1-2 µl of this evaporated solvent is injected into the GC-MS. If the resulting data has no significant peaks which interfere with the analysis, then the solvent is available for use in casework. The data labeling shall include, at a minimum, the manufacturer, lot number, start volume, end volume, the suitability results, the evaluator's initials, and the date of evaluation.

4.1.12.4 Charcoal strips – Each new lot of charcoal strips must be tested with a positive and negative control prior to their use in casework. The negative control will be eluted as received or halved prior to elution. The positive control will consist of a charcoal strip half suspended in a can spiked with a 1:1 gasoline/kerosene mixture, to reflect a broad range. The negative and positive controls will be extracted and analyzed by the method used in casework. The strips are deemed suitable for casework when the negative control's resulting data indicates no ignitable liquids and the positive control's resulting data shows the presence of a mixture of gasoline and kerosene. The data labeling shall include, at a minimum, the name of control, charcoal strip lot number being tested, positive control reagent lot number (when applicable), the suitability results, the evaluator's initials, and the date of evaluation.

COPYRIGHT © 2023 VIRGINIA DEPARTMENT OF FORENSIC SCIENCE

4.1.12.5 Paint cans – Paint cans are used by the section for a variety of purposes, such as for analysis of controls, blanks, and for evidence packaging. Each new lot/batch of paint cans must be tested prior to their use in casework. One can from each lot/batch will be tested using the method used in casework. The lot/batch is deemed suitable for casework when the resulting data indicates no ignitable liquids or other interfering patterns are present. The data labeling shall include, at a minimum, the can distributor/vendor, can size and lot or batch number being tested, the suitability results, the evaluator's initials, and the date of evaluation.

4.1.12.6 Extract Vials – Each new lot of vials used for fire debris extraction (to include passive adsorption elution and solvent extraction techniques) and whole liquids must be tested prior to their use in casework. Approximately 250 µl of CS_2 will be added to one capped vial and left at room temperature for at least 16 hours. Following injection of the CS_2 into the GC-MS, the data shall be evaluated for suitability. The lot is deemed suitable for casework when the resulting data indicates no ignitable liquids or other interfering patterns are present. The data labeling shall include, at a minimum, the vial manufacturer and lot number being tested, the suitability results, the evaluator's initials, and the date of evaluation.

4.1.12.7 Data from carbon disulfide, pentane, charcoal strip, paint can, and vial checks shall be printed and retained pursuant to the Library of Virginia Specific Schedule Number 778-001 (Quality Assurance: Equipment, Standards, and Instruments 200540 series).

4.1.12.8 There must be at least one blank between each case sample injected. If the autosampler sequence runs longer than the work day or overnight, the Resolution Test Mixture (RTM) shall be included at the end of the sequence.

4.1.12.9 Evidence submitted for fire debris analysis shall be stored in a manner to avoid contamination and minimize degradation.

4.1.12.9.1 To minimize degradation, the majority of fire debris evidence will be stored in a flammable-materials refrigerator in their respective sealed metal cans until such

UNCONTROLLED COPY

time as they are able to be analyzed. Whole liquids do not need to be refrigerated.

4.1.12.9.2 To avoid contamination, large containers (e.g., gasoline containers) or items with a strong petroleum product odor shall be stored in a hood or away from other fire debris evidence.

4.1.12.10 Most fire debris evidence packaged in a paint can requires the agency submission of an empty, unused paint can of corresponding size from the same lot/batch to serve as a control.

4.1.12.10.1 The control can will be tested for ignitable liquids as a case Item, and the results will be reported on the Certificate of Analysis. If ignitable liquids are present in the control can(s), any similar product present in any samples would be clearly reported and qualified.

4.1.12.10.1.1 If the control can data exhibits similarities to data from a corresponding sample that requires concentration, then the control can shall also be concentrated.

COPYRIGHT © 2023

4.1.12.10.2 Control cans are not required for whole, non-aqueous liquids as the liquid is sampled and analyzed directly from the container. If submitted, a control can corresponding to a can containing whole, non-aqueous liquid should be appropriately addressed on the report (e.g., not analyzed). If no control can was submitted for a whole, non-aqueous liquid, the appropriate disclaimer should be added to the report.

VIRGINIA DEPARTMENT OF FORENSIC SCIENCE

4.1.12.10.3 For fire debris evidence submitted in a non-air-tight container (e.g., clothing in a paper or plastic bag) that is transferred to a DFS provided can for passive adsorption-elution analysis, a control can shall be addressed on the report.

4.1.12.10.4 Occasionally, the submission of a control can is prevented due to insufficient inventory from the same lot/batch. In such instances, the lack of control can shall be addressed on the report.

4.2 Direct Injections

4.2.1 Purpose

When a whole liquid is obtained, a direct injection may be performed. The purpose of a direct injection is to introduce a whole liquid into the GC-MS.

4.2.2 Minimum Standards and Controls

4.2.2.1 A small amount, determined by the examiner, should be injected to ensure that the GC-MS is not overloaded.

4.2.2.2 If a solvent is used to dilute the sample, then a solvent blank must be included in the case file.

4.2.2.3 Precautions should be taken to preserve a portion of untested liquid, which will be returned with the evidence. Given the volatility and sample amount, preservation may require adsorption onto a charcoal strip.

4.2.3 Analytical Procedures

4.2.3.1 Whole liquid samples can be injected directly into the gas chromatograph-mass spectrometer (GC-MS).

UNCONTROLLED COPY

4.2.3.2 Alternatively, whole nonaqueous liquid samples may be diluted with either pentane or carbon disulfide and injected directly into the GC-MS.

4.2.4 References

4.2.4.1 Midkiff, Charles R. "Arson and Explosive Investigation," Forensic Science Handbook, Volume 1, 2nd Edition, Pearson Education, Inc., 2002, pages 479-524.

4.2.4.2 Stauffer, E., Dolan, J., and Newman, R., Fire Debris Analysis, Burlington, MA, Elsevier, Inc., 2008, pp. 296-354.

4.3 Ambient Headspace

4.3.1 Purpose

If a sample contains highly volatile components, these components will be in the vapor state at room temperature. The purpose of an ambient headspace extraction is to sample volatile components present in the air space above the debris. A portion of this vapor sample is injected directly into the gas chromatograph-mass spectrometer (GC-MS).

Special considerations that should be noted with this extraction technique:

COPYRIGHT © 2023
VIRGINIA DEPARTMENT OF FORENSIC SCIENCE

4.3.1.1 May be affected by the presence of water in the sample, particularly if the compound of interest is miscible with water.

4.3.1.2 Produces a disproportionate representation of low boilers (highly volatile) in the headspace i.e., swamping of headspace with more volatile components producing an incomplete pattern OR ignitable liquid mixtures may be masked by the presence of only the most volatile components.

4.3.1.3 Must follow-up with a more comprehensive recovery method such as solvent extraction or adsorption-elution if more complex hydrocarbon mixtures are to be identified.

4.3.2 Minimum Standards and Controls

4.3.2.1 Use a new disposable syringe for each sample and standard injected.

4.3.2.2 A syringe/room air blank must be run prior to each sample. These blank runs must be satisfactory, having no significant peaks in the region of interest, before injecting case samples.

4.3.3 Analytical Procedures

4.3.3.1 Using a disposable syringe that has been flushed with room air, draw off about 1 ml of vapor from the interior of the container.

4.3.3.2 Inject the vapor sample directly into the GC-MS. Generally, the headspace method is used.

4.3.3.2.1 If no significant or identifiable peaks of interest are present continue with another recovery method. Peaks that are considered significant should be pursued, however, if they are not pursued, an explanation shall be recorded in the case notes.

4.3.3.2.1.1 The presence of an oxygenated solvent would be considered significant if it is present at an abundance of at least one order of magnitude above the overall matrix peaks in the chromatograph. If there are no matrix peaks in the chromatograph, the

UNCONTROLLED COPY

oxygenated solvent would be significant if it were present at an abundance of at least one order of magnitude above the background.

4.3.3.2.1.2 The examiner may pursue an oxygenated solvent for identification should he/she feel that the presence of the solvent at low levels would be significant to the case. (i.e., Isopropanol is observed at low levels in a case where the investigator states that rubbing alcohol is suspected to have been used as an ignitable liquid.)

4.3.3.2.2 If a peak(s) of interest is present, run a standard(s) using the library search as a guideline.

4.3.3.2.2.1 Inject the vapor sample directly into the polar column GC. A semi-polar column may be used, if necessary.

COPYRIGHT © 2023

4.3.3.2.2.2 Inject the appropriate standard(s).

4.3.3.2.2.3 Continue with another recovery method.

4.3.4 References

VIRGINIA DEPARTMENT OF FORENSIC SCIENCE

4.3.4.1 ASTM E 1388-17, Standard Practice for Sampling of Headspace Vapors from Fire Debris Samples.

4.3.4.2 Caddy B., Smith F. P., Macy J.: Methods of Fire Debris Preparation for Detection of Accelerants: Forensic Science Review 3: 57; 1991.

4.3.4.3 Midkiff, Charles R. "Arson and Explosive Investigation," Forensic Science Handbook, Volume 1, 2nd Edition, Pearson Education, Inc., 2002, pages 479-524.

4.3.4.4 Stauffer, E., Dolan, J., and Newman, R., Fire Debris Analysis, Burlington, MA, Elsevier, Inc., 2008, pp. 395-399.

4.3.4.5 ASTM E 1618-19, Standard Test Method for Ignitable Liquid Residues in Extracts from Fire Debris Samples by Gas Chromatography-Mass Spectrometry.

4.3.4.6 Phelps, J. L., Chasteen, C. E., Render, M. M., " Extraction and Analysis of Low Molecular Weight Alcohols and Acetone From Fire Debris Using Passive Headspace Concentration," *Journal of Forensic Sciences*, Vol. 39, No. 1, Jan. 1994, pp. 194-205.

4.4 Solvent Extraction

4.4.1 Purpose

The purpose of a solvent extraction is to remove petroleum products which may be present in the debris. This extract may be concentrated by evaporation, if needed, and a portion injected into the gas chromatograph-mass spectrometer (GC-MS).

Special considerations that should be noted with this extraction technique:

4.4.1.1 Many components from the debris are also soluble in pentane and these may interfere with chromatogram interpretation. Generally, solvent extraction is not preferred for the extraction of clothing, leather goods and melted plastics due to these interferences.

4.4.2 Safety Considerations

UNCONTROLLED COPY

4.4.2.1 Pentane (C_5) should be kept from heat, heat sources and sources of ignition.

4.4.2.2 Perform extractions in a fume hood.

4.4.3 Minimum Standards and Controls

4.4.3.1 Previously cleaned glassware is rinsed with pentane prior to use.

4.4.3.2 With this procedure, an extraction blank must be obtained at the same time as the debris extraction. Approximately the same volume of pentane decanted off for the extraction should be used for the extraction blank and this extraction blank should be reduced to at least the same approximate volume as the most reduced sample. For example, if 80 ml of pentane is used to extract the debris and only approximately 50 ml is decanted off and the extract is evaporated to 2 ml, then use approximately 50 ml of pentane and evaporate to 2 ml for the extraction blank. Compare the extraction blank to the debris extract(s).

COPYRIGHT © 2023

4.4.3.3 If the sample extract is to be concentrated by evaporation, the extraction blank will be evaporated a similar amount. A copy of the extraction blank will be placed in each case file extracted at that time.

4.4.4 Analytical Procedures

VIRGINIA DEPARTMENT OF FORENSIC SCIENCE

4.4.4.1 Add pentane to the selected debris. The amount of pentane needed will vary with the amount and kind of debris. Use enough solvent to permit thorough “wetting” of the debris.

4.4.4.2 The debris may be transferred to a beaker, evaporating dish or other suitable container or may be wetted with pentane while inside the original paint can container.

4.4.4.3 As appropriate, the entire sample or a representative portion may be selected for extraction. If only a portion is extracted, a description of the portion selected is recorded in the case notes.

4.4.4.4 If the extraction is performed in a beaker and the debris is flexible/absorbent, a smaller beaker may be used as a plunger to promote removal of the pentane from the debris.

4.4.4.5 If the debris is nonporous, the extraction may be performed by rinsing the surfaces.

4.4.4.6 Decant the pentane, filter and concentrate, as necessary.

4.4.4.6.1 Decant the pentane into an evaporating dish, beaker or other suitable container.

4.4.4.6.1.1 If only pentane is present, Whatman #1 or #1PS filter paper or a Pasteur pipette with a small plug of glass wool may be used.

4.4.4.6.1.2 If two phases are present (i.e., pentane and water), the water may be removed by using Whatman #1PS filter paper or a separatory funnel.

4.4.4.6.1.3 Alternatively, either the solvent layer or the water layer may be removed with a Pasteur pipette.

4.4.4.6.1.4 If filter paper or glass wool is used, filter the extraction blank as well.

4.4.4.6.2 Alternatively, decant the pentane into an Erlenmeyer flask. Place the flask in a dish of warm water or an ultrasonic cleaner and apply a vacuum to a disposable pipette inserted into a rubber stopper in the neck of the flask.

UNCONTROLLED COPY

4.4.4.6.3 The pentane may be concentrated using a disposable pipette attached to a vacuum line to pull off the vapors above the extract, by using house air with, or without, a microevaporator, or by allowing the uncapped vials to sit in the hood.

4.4.4.7 The amount of concentrating (evaporating) will be based on the sample. A strong sample (one which possesses an unavoidable strong petroleum odor) may need little to no evaporation. A sample that is weak (one which does not possess an unavoidable petroleum odor) should be evaporated down to about 1.0 – 0.5 ml.

4.4.4.8 Transfer extract to a labeled vial.

4.4.4.9 Record in the notes the approximate volume of pentane "in", the approximate volume of pentane "out" and the approximate volume to which the pentane is reduced for both the case sample(s) and the extraction blank, as appropriate.

4.4.4.10 Inject an appropriate volume of pentane into the GC-MS.

COPYRIGHT © 2023

4.4.4.11 For preservation purposes, adsorb at least a portion of the analyzed extract on a charcoal strip, package appropriately, and return with the evidence.

4.4.5 References

VIRGINIA DEPARTMENT OF FORENSIC SCIENCE

4.4.5.1 ASTM E 1386-15, Standard Practice for Separation and Concentration of Flammable or Combustible Liquid Residues from Fire Debris Samples by Solvent Extraction.

4.4.5.2 Caddy B., Smith F. P., Macy J.: "Methods of Fire Debris Preparation for Detection of Accelerants": Forensic Science Review 3: 57; 1991.

4.4.5.3 Midkiff, Charles R. "Arson and Explosive Investigation," Forensic Science Handbook, Volume 1, 2nd Edition, Pearson Education, Inc., 2002, pages 479-524.

4.4.5.4 Stafford, David T. "Fire Investigation. Part II: Laboratory Investigation", Crime Laboratory Digest Vol. 14, No. 1 January 1987.

4.4.5.5 Stauffer, E., Dolan, J., and Newman, R., Fire Debris Analysis, Burlington, MA, Elsevier, Inc., 2008, pp. 395-399.

4.5 Passive Adsorption-Elution

4.5.1 Purpose

The purpose of the passive adsorption-elution extraction is to remove volatile compounds, petroleum products and other ignitable liquids which may be present in the debris and put them into a liquid which can be analyzed via gas chromatography-mass spectrometry (GC-MS). Passive adsorption-elution is a headspace concentration method, also referred to as the **charcoal strip method**, which relies on the volatility of ignitable liquids. Volatilized ignitable liquids are removed by heat without a vacuum and are trapped on a charcoal strip. Ignitable liquids are eluted from the charcoal with a solvent (carbon disulfide) and analyzed.

Special considerations that should be noted with this extraction technique:

4.5.1.1 Samples containing a large amount of petroleum products can exhibit selective adsorption of the components.

4.5.1.2 If a sample resists heating, such as insulation, this extraction method is not preferred.

UNCONTROLLED COPY

4.5.1.3 This extraction method may not fully recover petroleum products of low volatility. (i.e., Kerosene and Diesel Fuel cannot be distinguished by this method.) If a heavy petroleum distillate is indicated by the data, a follow-up pentane extraction may be conducted.

4.5.2 Safety Considerations

4.5.2.1 Carbon disulfide (CS_2) is a hazardous chemical with respect to both health and safety and must be handled with extreme care. Avoid physical contact with CS_2. Avoid inhalation of CS_2.

4.5.2.2 CS_2 should be kept from heat, heat sources and sources of ignition.

4.5.2.3 Perform elutions in a fume hood.

4.5.2.4 Care should be exercised when removing cans from ovens. Cans must be allowed to cool to approximately room temperature prior to opening for removal of the charcoal strip.

COPYRIGHT © 2023

4.5.3 Minimum Standards and Controls

4.5.3.1 For each day that samples are prepared using this method, an extraction blank will be prepared and extracted in each oven used. To prepare an extraction blank, one pre-cut charcoal strip will be extracted using the same procedure as for the evidentiary samples. A copy of the extraction blank will be placed in each case file extracted that day.

VIRGINIA DEPARTMENT OF FORENSIC SCIENCE

4.5.3.2 If the sample extract is to be concentrated by evaporation, the extraction blank will be evaporated a like amount.

4.5.3.3 Two pre-cut halves of a new charcoal strip are used for every case item: one half for examination purposes, the other for preservation purposes. Strips will be cut using a clean scalpel.

4.5.3.4 Ovens will be regularly checked to ensure they are functioning properly.

4.5.4 Analytical Procedures

4.5.4.1 The sample must be in a metal can or polyethylene terephthalate (PET) can.

4.5.4.2 Suspend two halves of a pre-cut charcoal strip inside the evidence container via a paper clip. Close the container.

4.5.4.3 Lids should be taped down during extraction.

4.5.4.3.1 If a lid does pop up or off, document this in the case file notes and determine if the extraction blank has been affected by this event.

4.5.4.4 Place the can in an oven set at 65 ºC for approximately 16 hours.

4.5.4.4.1 Record the oven used for each case sample on the Fire Debris Worksheet.

4.5.4.5 Remove the cans from the oven and allow them to cool, if necessary.

4.5.4.6 Open the lid and remove the suspended strips. Place the strips into separate labeled vials.

4.5.4.7 The vial containing the strip half chosen for preservation will be properly packaged for return with the evidence.

4.5.4.8 To the vial containing the strip half chosen for elution, add CS_2 (generally 250uL or less).

UNCONTROLLED COPY

4.5.4.9 Inject a portion of the CS_2 extract into the GC-MS.

4.5.4.10 If the autosampler is to be used, agitate the vial, and transfer the extraction solution to a labeled autosampler vial fitted with an insert via disposable pipette.

4.5.4.10.1 Autosampler vials should be recapped if further analysis is necessary.

4.5.5 References

4.5.5.1 ASTM E 1412-19, Standard Practice for Separation of Ignitable Liquid Residues from Fire Debris by Passive Headspace Concentration with Activated Charcoal.

4.5.5.2 Dietz, W.R., "Improved Charcoal Packaging for Accelerant Recovery by Passive Diffusion," *Journal of Forensic Sciences,* Vol. 36, No. 1, Jan. 1991, Pp 111-121.

4.5.5.3 Material Safety Data Sheet for Carbon Disulfide.

4.5.5.4 Newman, R.T., Lothridge, K. And Dietz, W., "The Use of Activated Charcoal Strips for Fire Debris Extractions by Passive Diffusion Part 1: The Effects of Time, Temperature, Strip Size, and Sample Concentration," *Journal of Forensic Sciences*, Vol. 41, No. 3, May 1996, Pp. 167-176.

4.5.5.5 Stauffer, E., Dolan, J., and Newman, R., Fire Debris Analysis, Burlington, MA, Elsevier, Inc., 2008, pp. 399-415.

COPYRIGHT © 2023 VIRGINIA DEPARTMENT OF FORENSIC SCIENCE

4.6 Gas Chromatography-Mass Spectrometry (GC-MS)

4.6.1 Purpose

Gas Chromatography-Mass Spectrometry (GC-MS) provides a Total Ion Chromatogram (TIC) pattern for the sample as well as the ability to extract patterns for groups of specific ions. Extracted ion chromatography (EIC), or mass spectral ion profiling (MSIP), is especially useful when samples show a high degree of debris interference.

4.6.2 Analytical Procedures

4.6.2.1 Each day that the GC-MS is used for case samples, the Resolution Test Mixture (RTM) and the Oxygenate Check Sample (OCS) (1:2:1 acetone, ethanol and methylethylketone in CS_2) must be injected prior to case samples. This will serve as a check of the resolution and proper functioning of the instrument.

4.6.2.1.1 See ¶ 14.3.1.3 and ¶ 14.3.1.4 for acceptance criteria.

4.6.2.2 Mass Spectral Quality Control

4.6.2.2.1 Full scan mass spectral classification of an ignitable liquid: No rigid TIC or Ion Profile match criteria are defined to classify a product. Flexibility is given to the experienced interpreter because rigid criteria can lead to misidentification as well as under-identification. Classification will be based on a number of factors, such as, relative retention times, compounds present, patterns present in the TIC as well as the patterns and relative profile abundances present in the Ion Profiles, contribution from the matrix and literature references.

4.6.2.2.2 Whenever possible, the classification of an ignitable liquid product should be based on a comparison of TIC and Ion Profile patterns from the sample and from

UNCONTROLLED COPY

an actual reference material. If a reference material is not available, literature references or internal historical data may be used.

4.6.2.2.3 The data files for the reference materials used for direct comparison to the samples should be collected within approximately two months of the sample data files. These data files may only be used if no instrument maintenance affecting the RTM acceptance criteria retention times was completed within the approximate two month time period.

4.6.2.3 Systematic naming shall be used for standard fire debris methods with the autosampler: AUTF + injection volume + split. Systematic naming shall be used for standard fire debris methods using manual injection: MANF + split.

4.6.2.4 The injection volume and split ratio will vary for the AUTF and MANF methods, but the temperature and mass spec acquisition parameters will be the same.

4.6.2.4.1 These methods cannot be changed without prior approval of the Chemistry Program Manager.

COPYRIGHT © 2023

4.6.2.5 Systematic naming and content shall be used for standard fire debris macros.

4.6.2.5.1 These macros cannot be changed without prior approval of the Chemistry Program Manager.

VIRGINIA DEPARTMENT OF FORENSIC SCIENCE

4.6.2.6 A portion of the extract or whole liquid is injected into the GC-MS.

4.6.2.7 A Library Summary Report may be generated to give an indication of the types or classes of compounds present when many peaks are present in the TIC.

4.6.2.8 The data handling system is used to extract selected ion chromatograms for each compound type. Two or more characteristic ions are summed to enhance signal-to-noise and decrease interference by extraneous compounds that contain only one of the ions. The following ions are used for the individual classes of hydrocarbons:

Alkanes: Ions 57, 71, 85, and 99
Aromatics: Ions 91, 105, 119, 134
Indanes: 117, 131
Olefins/Cycloparaffins: 55, 69, 83
Polynuclear aromatics (PNAs): 128, 142, 156

4.6.2.9 Total ion chromatograms and extracted ion chromatograms of the unknown sample are visually compared against the corresponding extracted ion chromatograms from reference samples.

4.6.3 References

4.6.3.1 ASTM E 1618-19, Standard Guide for Identification of Ignitable Liquid Residues in Extracts from Fire Debris Samples by Gas Chromatography-Mass Spectrometry.

4.6.3.2 Christy, B., Winters, K., Rossheim, A., Newman, R., Tang, L., “A foundational study of fire debris using quantitative measures of chromatographic features in gasoline and the use of graphical display to demonstrate data sufficiency”, *Forensic Chemistry*, 24, 2021.

4.6.3.3 Newman, R., Gilbert, M., Lothridge, K. "GC-MS Guide to Ignitable Liquids," CRC Press, 1998, pages 1-5.

UNCONTROLLED COPY

4.6.3.4 Stauffer, E., Dolan, J., Newman, R. "Fire Debris Analysis," Elsevier, Inc., 2008, pages 235-293.

4.7 Identification Criteria

4.7.1 Possible reported results include: No Identification or Identification.

4.7.1.1 Used less frequently, but still appropriate in some circumstances, would include: Consistent.

4.7.2 No Identification - The sample does not contain sufficient peaks/pattern that correlate to reference patterns on file. The report would generally read: No ignitable liquids were identified in the Item __ extract.

4.7.2.1 If the sample contains some peaks/patterns (as indications) of a reference pattern on file, but due to being weak, having interferences, or other factors, no identification is made, a descriptive sentence may be added to the report. This would generally read: However, the data contains some peaks/patterns of a ___ reference sample but, due to being weak, having interferences or other factors, an identification could not be made.

4.7.2.1.1 At least one "reason" must be listed in the descriptive sentence.

4.7.3 Identification - The sample contains sufficient peaks/pattern correlating to a reference pattern on file. There is no set number assigned to the number of peaks that must correlate. It is the overall patterns that are compared to the reference patterns. The report would generally read: The Item __ extract contained a _____.

4.7.4 Consistent – The sample contains peaks/patterns that correspond well to portions of a reference pattern or a combination of reference patterns on file but there is no one reference pattern that correlates in its entirety with the data. The report would generally read: The Item __ extract was consistent with containing a _____.

COPYRIGHT © 2023 VIRGINIA DEPARTMENT OF FORENSIC SCIENCE

4.8 Documentation

4.8.1 As a minimum, each case file will include:

- A Fire Debris Worksheet(s),
- One or more full page, landscape format, integrated TIC's covering the entire sample run time for each Item of evidence analyzed,
- One or more full page, landscape format, integrated TIC's covering the region of interest for each Item of evidence analyzed with pattern at least 75% on scale,
- Blanks before each Item of evidence analyzed. Either full page, landscape format covering the region of interest at a minimal abundance or, if identifying individual peaks, extracted ions for the individual compounds over the region of interest,
- One or more sets of EIC's for each Item of evidence analyzed, as appropriate,
- Data for each reference necessary to support the conclusions,
- An extraction blank and, as appropriate, a concentrated extraction blank,
- At least one copy of the daily Resolution Test Mixture and Oxygenate Check Sample integrated TICs,
- At least one copy of the Polar Check Sample integrated chromatogram or TIC, if a polar column was used, and
- A Library Search Report for all samples being reported as negative, as appropriate. For example, it would not be necessary to include a Library Search Report for a sample showing no peaks.

4.8.2 Each case sample shall be checked at the lowest abundance setting as practicable to ensure that no other patterns are present that should be addressed.

UNCONTROLLED COPY

4.8.3 The minimum requirements for labeling data are as follows:

- Case Number
- Item Number
- Handwritten Examiner's Initials
- Injection volume (except Auto method)
- Injection solvent
- Note if the original sample has been concentrated
- If the reference has been diluted, note solvent used

4.8.4 Blanks shall be printed at the same abundance value as or less than the case sample chromatograms.

4.8.5 When identifying single components such as alcohol, acetone, pinene, etc., retention time data for samples and standards are needed from at least the semi-polar or polar GC (or GC-MS) column along with retention time and spectral data from the nonpolar GC-MS column.

COPYRIGHT © 2023

4.8.6 When identifying normal alkanes or light aromatic products, retention times and mass spectra for the major peaks are necessary.

4.8.6.1 At a minimum, retention times and mass spectra should be compared to primary standards. In addition, a minimum of one (1) product from the reference collection should be included as an example of a commercially available normal alkanes or light aromatic product.

VIRGINIA DEPARTMENT OF FORENSIC SCIENCE

4.8.6.1.1 If an appropriate commercially available normal alkanes or light aromatic product is available and examined for inclusion in the case file for pattern comparison, only the nonpolar GC-MS retention time data and mass spectra are necessary.

4.8.6.1.2 If no appropriate commercially available normal alkanes or light aromatic product is available or if only one or two normal alkanes are present for identification (no pattern exists), retention time data from a second GC system is necessary.

4.8.7 For EIC: at a minimum, include the following:

- A single-page, portrait format, printout of a series of five summed extracted ion profiles (EIPs) covering the entire sample/standard run time, including
- Alkanes (57 + 71 + 85 + 99)
- Aromatics (91 + 105 + 119 + 134)
- Indanes (117 + 131)
- Olefins/Cycloparaffins (55 +69 + 83)
- Polynuclear aromatics (PNAs) (128 + 142 + 156)
- A single page portrait format printout of the series of five summed extracted ion profiles covering the sample/standard run time of interest.

4.8.8 When there are indications that gasoline may be present in the data, the Excel Sufficiency Workbook shall be used. The retention time and the background subtracted abundance of the peaks of interest shall be recorded in the appropriate locations of the Sufficiency Workbook. The Retention Time Worksheet and the Sufficiency Graph with the plotted data point will be included in the case file. The generated Sufficiency Workbook shall be saved to the object repository. This workflow is not necessary when there is minimal matrix contribution to the data.

4.8.8.1 An identification is made when the data point is plotted in the green section of the Sufficiency Graph and no identification is made when the data point is plotted in the red section of the Sufficiency Graph.

UNCONTROLLED COPY

4.8.8.2 When the data point is plotted in the yellow section of the Sufficiency Graph, additional documentation justifying the drawn conclusion shall be included in the case file.

4.8.9 If GC-FID chromatograms have also been generated, include: one or more chromatograms for each Item of evidence analyzed and each reference necessary to support the conclusions, blanks before each Item of evidence analyzed, and a check sample. Label chromatograms as per ¶ 4.8.3.

4.8.9.1 To the maximum extent possible, case samples and references need to be at least 75% on scale or greater in the printed chromatogram.

4.8.9.2 Blanks shall be printed at the same mV value or less than the case sample chromatograms

4.9 Report Wording

4.9.1 Methods: Techniques utilized in the analysis shall be listed on the report.

4.9.1.1 Item _____ was extracted using a passive adsorption-elution technique. The Item ____ extract was examined using Gas Chromatography-Mass Spectrometry (GC-MS).

4.9.1.2 Items _____ and _____ were extracted using a passive adsorption-elution technique. The Item _____ and _____ extracts were examined using Gas Chromatography-Mass Spectrometry (GC-MS).

4.9.1.3 Item _____ was extracted using ambient headspace and solvent techniques. The Item _____extracts were examined using Gas Chromatography (GC) and Gas Chromatography-Mass Spectrometry (GC-MS).

4.9.2 If a container is submitted and not described with any detail in the item description, then provide this information in the Results.

4.9.2.1 For example: Item 1 White plastic bottle. RESULTS AND INTERPRETATIONS: Item 1 was commercially labeled, “Safeway Charcoal Lighter…32 FL OZ”.

4.9.2.2 In some instances it may be more appropriate to report that Item 1 was commercially labeled in part… or that the Item 1 bottle was melted and charred and the only legible labeling read…

4.9.2.3 When the liquid from the container or the extract of the container is determined to be consistent with what would be its expected use: …consistent with the Item _____ product as labeled; consistent with the contents label on Item _____; consistent with the labeling on the Item _____ container.

For example: Item 1 White plastic bottle RESULTS AND INTERPRETATIONS: Item 1 was commercially labeled, “Safeway Charcoal Lighter…32 FL OZ”. The Item 1 liquid was identified as a medium petroleum distillate which is consistent with the labeling on the Item 1 container.

Or: Item 5 Bottle of Lamplight Farms Cherry Lamp Oil RESULTS AND INTERPRETATIONS: The Item 5 extract contained a medium naphthenic-paraffinic product consistent with the product as labeled.

4.9.3 Results and Interpretations:

4.9.3.1 For no identification (ID):

4.9.3.1.1 No ignitable liquids were identified in the Item _____ extract.

COPYRIGHT © 2023 VIRGINIA DEPARTMENT OF FORENSIC SCIENCE

UNCONTROLLED COPY

4.9.3.1.2 No ignitable liquids were identified in the Item _____ or _____ extracts.

4.9.3.1.3 No ignitable liquids were identified in the extract of the Item _____ aqueous liquid.

4.9.3.1.4 No ignitable liquids were identified in the Item __ extract. However, the data contained some peaks/patterns of a ____reference sample but, due to being weak, having interferences, or other factors, an identification could not be made.

4.9.3.2 For No Conclusion Reached:

4.9.3.2.1 In some circumstances, a definitive conclusion cannot be reached as to the absence or presence of an ignitable liquid. A report wording example:

- Items 1 and 2 were extracted using a passive adsorption-elution technique. During this extraction, the metal cans containing each item opened; therefore, no conclusion could be reached as to the results of these extracts.

COPYRIGHT © 2023

- The Item C container did not remain airtight during the passive adsorption-elution extraction. Therefore, no conclusion could be reached on the passive adsorption-elution extraction data.

VIRGINIA DEPARTMENT OF FORENSIC SCIENCE

4.9.3.3 For IDs:

4.9.3.3.1 Generally speaking, the ignitable liquid classification categories reported are based on ASTM E1618. With the exception of gasoline, these classes are further classified as light, medium or heavy based on n-alkane (boiling) range. A light product is generally n-C4-n-C9, a medium product is generally n-C8-n-C13, and a heavy product is generally n-C9-n-C20+. A product may also be classified as "light to medium" or "medium to heavy" as appropriate. The ignitable liquid classification categories are as follows:

- Gasoline,
- Petroleum Distillates (Light, Medium or Heavy),
- Isoparaffinic Products (Light, Medium or Heavy),
- Aromatic Products (Light, Medium or Heavy),
- Naphthenic-Paraffinic Products (Light, Medium or Heavy),
- Normal-Alkanes products (Light, Medium or Heavy),
- Oxygenated Solvents, and
- Miscellaneous products (Light, Medium or Heavy).

Heavy Oil/Lubricant petroleum products may also be reported. This classification is generally not considered ignitable and is not covered under ASTM 1618.

4.9.3.3.1.1 A minimum of two (if possible) and maximum of three (if necessary) examples of commercial products would typically be listed for most of the above ignitable liquid classifications. The examples used most routinely for medium petroleum distillates are some mineral spirits, paint thinners and charcoal starter fluids. The commercial products used as examples for Heavy Petroleum Distillates include Kerosene and/or Diesel Fuel as appropriate.

4.9.3.3.2 The Item _____ extract contained _____.

UNCONTROLLED COPY

4.9.3.3.3 The Item _____ extract contained _____ which can be found in, but is not limited to, some _____ (give examples of general product types).

4.9.3.3.4 The Item _____ and _____ extracts each contained _____.

4.9.3.3.5 The Item _____ extract contained a mixture of _____ and _____.

4.9.3.3.6 The Item _____ and _____ extracts each contained a mixture of _____ and _____.

4.9.3.3.7 The combined Item _____ and _____ extracts contained a mixture of _____ and _____.

4.9.3.3.8 The combined Item _____ and _____ extracts contained a mixture of _____ and _____ . The _____ can be found in, but is not limited to, some _____(give examples of general product types).

COPYRIGHT © 2023

4.9.3.3.9 Certain types of debris (such as leather, newsprint, and carbonless copy paper) are known to give petroleum product patterns on GC-MS. When this type of debris is analyzed and a petroleum product is identified, the following statement should be used:

VIRGINIA DEPARTMENT OF FORENSIC SCIENCE

It should be noted that some _____ (e.g., leather goods) may contain _____ (e.g., heavy petroleum distillates).

4.9.3.4 For liquids:

4.9.3.4.1 The Item _____ liquid was identified as _____.

4.9.3.4.2 The Item _____ and _____ liquids were each identified as _____.

4.9.3.4.3 If an aqueous liquid is encountered:

The extract of the Item _____ aqueous liquid contained _____.

4.9.3.4.4 If applicable, an aqueous and a nonaqueous liquid may be described as "immiscible".

Item # Two immiscible liquids

RESULTS AND INTERPRETATIONS:

The Item _____ nonaqueous liquid was identified as _____.

The Item _____ aqueous liquid consisted essentially of _____. or, The extract of the Item _____ aqueous liquid contained _____.

4.9.3.5 For heavy oil/lubricant petroleum products:

4.9.3.5.1 Due to the nature of heavy oil/lubricant petroleum products, there is some flexibility in how they may be reported.

The Item _____ extract was consistent with containing a heavy oil/lubricant petroleum product. Consistent with means that the data contained peaks/patterns that corresponded well to portions of a reference pattern or a combination of

UNCONTROLLED COPY

reference patterns on file but there was no one reference pattern that correlated in its entirety with the data.

4.9.3.5.2 If physical properties of a heavy oil/lubricant petroleum product are also present:

The Item _____ extract contained a heavy oil/lubricant petroleum product.

The Item _____ extract contained gasoline and was physically and chemically consistent with containing a heavy oil/lubricant petroleum product. Chemically consistent with means that the data contained peaks/patterns that corresponded well to portions of a reference pattern or a combination of reference patterns on file but there was no one reference pattern that correlated in its entirety with the data.

4.9.3.6 For wood and/or turpentine:

COPYRIGHT © 2023

4.9.3.6.1 When data suggests compounds present in both wood and turpentine and wood is present or may be present in an item, the examiner may identify the α-pinene and report as follows:

The Item _____ extract contained α-pinene. It should be noted that α-pinene occurs naturally in some woods and is also found in turpentine and some cleaning products.

VIRGINIA DEPARTMENT OF FORENSIC SCIENCE

4.9.3.6.1.1 If more than one terpene is identified, either list the individual compounds identified or use the word terpenes [e.g., The Item _____ extract contained terpenes. It should be noted that terpenes (or list the individual compounds) occur naturally in some woods and are also found in turpentine and some cleaning products.]

4.9.3.6.2 When data suggests compounds present in turpentine and the item is a whole liquid, then report as follows:

The Item _____ liquid was physically and chemically consistent with turpentine (a medium miscellaneous product).

4.9.3.6.3 When data suggests compounds present in turpentine and no wood is present and the item is an extract, then report as follows:

The Item _____ extract contained _____ (terpenes or list individual compounds). It should be noted that terpenes (or list the individual compounds) occur naturally in some woods and are also found in turpentine and some cleaning products.

4.9.3.7 For normal alkanes:

4.9.3.7.1 When reporting normal-alkanes products when a commercially available product is available:

The Item _____ extract contained a (light, medium or heavy) normal-alkanes product which can be found in, but is not limited to, some lamp oils.

- If physical properties of wax are also present:

  Item _____ contained a paraffin wax.

UNCONTROLLED COPY

4.9.3.7.2 When reporting normal alkanes when no commercially available product is available or if only one or two normal alkanes are identified, the individual alkanes should be listed on the report.

The Item _____ extract contained a mixture of undecane and dodecane (normal alkanes).

4.9.3.8 For volatiles analysis (e.g., ethanol, acetone, toluene):

4.9.3.8.1 The Item _____ liquid/extract contained _____ (e.g., methanol, ethanol, isopropanol, acetone) (an oxygenated solvent).

4.9.3.8.2 The Item _____ liquid consisted essentially of _____ (e.g., methanol, ethanol, isopropanol, acetone) (an oxygenated solvent).

4.9.3.8.3 No oxygenated solvents or other ignitable liquids were identified in the Item _____ extract.

COPYRIGHT © 2023

4.9.3.8.4 No alcohols or other ignitable liquids were identified in the Item _____ extract.

4.9.3.8.5 No ethanol was identified in the Item _____extract.

VIRGINIA

4.9.3.8.6 No ethanol or other ignitable liquids were identified in the Item _____ extract.

DEPARTMENT

4.9.3.8.7 No ignitable liquids were identified in the Item _____ extract.

OF

4.9.3.8.8 If appropriate, common sources of the compound may be included:

Item 1 consisted essentially of isopropanol (an oxygenated solvent), commonly referred to as rubbing alcohol.

FORENSIC SCIENCE

4.9.3.9 For comparisons:

4.9.3.9.1 Generally speaking, when a comparison between items has been requested and the result is implied, then no specific mention of the comparison is made in the CoA.

4.9.3.9.1.1 The results for both items are the same classification, e.g., Items 1 and 2 contain gasoline; therefore, it is implied that they could have had a common origin.

4.9.3.9.1.2 The results for both items are a different classification, e.g., Item 1 contains gasoline and Item 2 contains a medium isoparaffinic product; therefore, it is implied that they could not have had a common origin.

4.9.3.9.2 Upon occasion it may be necessary to include a statement regarding the comparison of samples. The results of the comparison, an appropriate conclusion statement, and level of association shall be reported with a "Terminology Key for Comparative Examinations" on the Certificate of Analysis. For example:

4.9.3.9.2.1 The Item _____ liquid was identified as acetone (an oxygenated solvent) and is consistent with the labeling on the can. Therefore, Item _____ was eliminated as a possible source of the Item _____ light petroleum distillate due to differences in chemical composition (**Exclusion/Elimination**).

UNCONTROLLED COPY

4.9.3.9.2.2 The Item ____ liquid was identified as _____ (results). Item _____ could not be associated with the Item _____ extract due to differences in chemical composition (**Exclusion/Elimination**).

4.9.3.10 For napalm:

4.9.3.10.1 When a homemade napalm material is received, in addition to the petroleum product, the identity of the added material should be pursued.

4.9.3.10.2 The Item _____ extract contained gasoline. Additionally, Item _____ was physically and chemically consistent with containing _____. (e.g., polystyrene, soap)

4.9.3.10.3 The following statement may also be added: It should be noted that some mixtures of gasoline and _____ (e.g., polystyrene, soap) may be referred to as "napalm".

COPYRIGHT © 2023

4.9.3.11 For reporting controls:

4.9.3.11.1 When the control pattern is seen in case samples (product examples are optional under this scenario):

VIRGINIA DEPARTMENT OF FORENSIC SCIENCE

4.9.3.11.1.1 The Item 1 and 2 (control can) extracts each contained a light aromatic product. Therefore, the packaging cannot be excluded as the source of the light aromatic product.

4.9.3.11.1.2 The Item 1 and 2 (control can) extracts each contained a light aromatic product, which can be found in, but is not limited to, the cans used as containers and adhesive removers.

4.9.3.11.1.3 Optionally, when the concentration of the ignitable liquid pattern in the Item is much higher than the concentration present in the control can:

Based on the relative concentration, the packaging, as represented by Item 3, was excluded as the source of the gasoline identified in Items 1 and 2.

4.9.3.11.2 When different Ignitable Liquids are identified in the control and case samples:

The Item 1 extract contained gasoline.

The Item 2 (control can) extract contained a light aromatic product. The packaging, as represented by Item 2, was excluded as the source of the gasoline identified in Item 1.

4.9.3.11.3 When control sample shows an Ignitable Liquid that is not seen in the case samples (No ID):

No ignitable liquids were identified in the Item 1 or 2 extracts.

The Item 3 (control can) extract contained a light aromatic product.

4.9.3.11.4 When the controls are negative and an Ignitable Liquid is identified in the case sample:

UNCONTROLLED COPY

- The Item 1 extract contained gasoline.

  No ignitable liquids were identified in the Item 2 (control can) extract. The packaging, as represented by Item 2, was excluded as the source of the gasoline identified in Item 1.

- The Item 1 extract contained a medium petroleum distillate which can be found in, but is not limited to, some mineral spirits, paint thinners, and charcoal starter fluids.

  No ignitable liquids were identified in the Item 2 or 3 (control) extracts. The gauze, as represented by Item 2, and the packaging, as represented by Item 3, were excluded as the source of the medium petroleum distillate identified in Item 1.

4.9.3.11.5 Same Ignitable Liquid in control and sample, plus another Ignitable Liquid in the sample:

COPYRIGHT © 2023

The Item 1 extract contained a medium petroleum distillate which can be found in, but is not limited to, some charcoal starter fluids and paint thinners.

The Item 1 and 2 (control can) extracts each contained a light aromatic product.

VIRGINIA DEPARTMENT OF FORENSIC SCIENCE

The packaging, as represented by Item 2, was excluded as the source of the medium petroleum distillate identified in Item 1, but cannot be excluded as the source of the light aromatic product.

4.9.3.11.6 Control(s) and Items are negative:

No ignitable liquids were identified in the Item 1, 2, or 3 extracts.

4.9.3.11.7 When there is no control can submitted:

- It should be noted that no control can was submitted for analysis.

- It should be noted that no control can was submitted for Items 1, 2, and 3.

- For whole, non-aqueous liquids: While no control can was submitted for Item 1, it should be noted that no control can was needed or necessary for analysis.

- For items submitted in non-air-tight containers and later transferred into a DFS can for analysis: The packaging containing Item 1 was not airtight. It should be noted that ignitable liquids are volatile and airtight packaging is required to prevent loss. Item 1 was transferred to a laboratory provided air-tight can for analysis. One can from the same lot/batch of laboratory provided cans was previously analyzed, served as a control can, and was found to contain no ignitable liquids. Therefore, the re-packaging of Item 1 was excluded as the source of the (ignitable liquid class) identified in Item 1.

4.9.3.11.8 Control can is physically different from the evidence cans:

Item 2 (control can) could be distinguished from the can containing Item 1 based on manufacturing characteristics; therefore, Item 2 could not serve as the control can for Item 1. Item 2 was not further examined.

UNCONTROLLED COPY

4.9.4 Full Report Wording Examples – Fire Debris

4.9.4.1 Example 1

Item 1	Fire debris from couch
Item 2	Fire debris from living room floor
Item 3	Control can

METHODS:

Items 1, 2, and 3 were extracted using a passive adsorption-elution technique. The Item 1, 2, and 3 extracts were examined using Gas Chromatography-Mass Spectrometry (GC-MS).

RESULTS AND INTERPRETATIONS:

The Item 1 extract contained gasoline.

COPYRIGHT © 2023

No ignitable liquids were identified in the Item 2 or 3 extracts. The packaging, as represented by Item 3, was excluded as the source of the gasoline identified in Item 1.

The evidence is being retained for personal pickup.

VIRGINIA DEPARTMENT OF FORENSIC SCIENCE

4.9.4.2 Example 2

Item 12	Carpet and padding from living room
Item 13	Carpet and padding from dining room
Item 14	Carpet and padding from bedroom
Item 15	Liquid from red plastic container on porch
Item 16	Control can

METHODS:

Items 12 through 14 and Item 16 were extracted using a passive adsorption-elution technique. Item 15, the Item 16 extract, and the Item 12 through 14 extracts were examined using Gas Chromatography-Mass Spectrometry (GC-MS).

RESULTS AND INTERPRETATIONS:

The Item 15 liquid was identified as gasoline.

No ignitable liquids were identified in the Item 12 or 13 extracts. However, the Item 12 and 13 data contained some peaks/patterns of a gasoline reference sample but, due to being weak, having interferences, or other factors, an identification could not be made.

The Item 14 extract was consistent with containing a heavy oil/lubricant product. Consistent with means that the data contained peaks/patterns that corresponded well to portions of a reference pattern or a combination of reference patterns on file but there was no one reference pattern that correlated in its entirety with the data.

No ignitable liquids were identified in the Item 16 extract. The packaging, as represented by Item 16, was excluded as the source of the gasoline identified in Item 15, the peaks/pattern seen in the Item 12 and 13 data, and the heavy oil/lubricant product identified in Item 14.

The evidence is being retained for personal pickup.

4.9.4.3 Example 3

UNCONTROLLED COPY

Item 6	Liquid from plastic bottle
Item 7	Shirt from victim
Item 8	Control can

METHODS:

Item 6 was examined using a miscibility test and Gas Chromatography-Mass Spectrometry (GC-MS). Items 7 and 8 were extracted using a passive adsorption-elution technique. The Item 7 and 8 extracts were examined using Gas Chromatography (GC) and GC-MS.

RESULTS AND INTERPRETATIONS:

The Item 6 liquid was identified as a medium petroleum distillate which can be found in, but is not limited to, some mineral spirits, paint thinners, and charcoal starter fluids.

The Item 7 extract contained isopropanol (an oxygenated solvent), commonly referred to as rubbing alcohol.

COPYRIGHT © 2023

The Item 8 extract contained a light aromatic product. The packaging, as represented by Item 8, was excluded as the source of the isopropanol identified in Item 7.

VIRGINIA
DEPARTMENT
OF
FORENSIC SCIENCE

UNCONTROLLED
COPY

5 FRACTURE MATCH

5.1 Purpose

To physically fit evidentiary materials back together along fractured edges. When accomplished, this examination provides conclusive evidence that the materials were at one time a single unit.

5.2 Analytical Approach

Items being submitted for fracture match, or physical fit, analysis include a variety of materials. Typically, when a material having reasonable rigidity breaks, irregularities appear at the break which may create pieces with corresponding features. Other types of materials may be subject to separation by cutting, tearing, shattering and so forth. When matching pieces are found that can be physically fitted back together again, the examiner will say with absolute certainty that the matching pieces were at one time a single unit.

5.2.1 Fiber examiners will conduct fracture match examinations of textile materials or other materials that contain fabric/fibers (e.g., duct tape).

COPYRIGHT © 2023

5.3 Minimum Standards and Controls

All reported identifications (K to Q) will be verified by a second qualified examiner who will conduct the verification from the original evidence. If the initial examiner has reconstructed the material for the fracture match, it may be left assembled for the verifying examiner. The examiner conducting the verification must take the pieces apart to verify the fracture match(s). The examiner's case file notes shall be initialed and dated by the second examiner who will include a notation to indicate that the fracture match conclusion was verified.

VIRGINIA DEPARTMENT OF FORENSIC SCIENCE

5.4 Analytical Procedures

5.4.1 Spread a clean piece of paper on the examination surface.

5.4.2 Examine each item of evidence visually to determine the correct orientation of the pieces. Begin with matching a surface (e.g., the outer color coat of paint chips, the fluorescing surface of float glass pieces, the smooth or finished surface of plastic fragments, etc.). After the pieces are marked for identification and "sided", contours, edges, colors, surface markings and so forth, can be used to help align pieces correctly. It is often helpful to fit together pieces of a given item to themselves ("knowns") and then fit them to additional items ("questioned") in the case.

5.4.3 Observe all orientations of the fit, using stereomicroscopy when possible and appropriate. Scratches, stains or defects that traverse the broken, cut or torn edge may serve to reinforce the physical fit conclusion.

5.4.4 Observe the matching sides "on end" when possible and appropriate. Matching hackle marks and defects may be seen and serve to reinforce the physical fit conclusion.

5.4.5 A cast of one or more of the separated edges may be prepared for comparison purposes. The cast (s) shall be designated as a sub-item(s) of the evidence from which it was generated, listed on the RFLE, in LIMS, and on the CoA. Casts shall be individually sealed and returned in the same container from which the sub-item was generated.

5.4.5.1 Casting is a procedure used to create a reverse image of a fractured surface, which can be used for comparison purposes.

- Mix casting compound as per manufacturer's instructions
- Apply casting material over the surface to be cast
- When casting material is set, gently loosen the cast from the item
- Consideration should be given regarding placement of identifying/orientation marks onto the item being cast

UNCONTROLLED COPY

5.4.6 Matching fabric pieces involves examination of general size and shape, construction, fiber type, colors, and long versus short threads.

5.4.7 When matching flexible materials (e.g., fabric, tape and some plastics), care must be taken to account for edge rolling, stretching, and twisting. Use of double stick tape on a rigid plate may be useful to stabilize the edge during comparison and to reduce the effects of distortion of stretching or twisting.

5.5 References

5.5.1 Saferstein, Richard, Criminalistics: An Introduction to Forensic Science, Prentice-Hall, Inc., 1995, pp. 65-67.

5.5.2 "Mikrosil Casting Material Information". AFTE Journal. Vol. 15, No. 2, p. 80.

5.5.3 "A Simple, Inexpensive Method for Making Castings from Silicone Molds". AFTE Journal. Vol. 47, No. 4, p. 234-236.

5.5.4 Barber, D.C. and Cassidy, F.H. "A New Dimension with 'Mikrosil' Casting Material". AFTE Journal. Vol. 19, No. 3, p. 328.

5.5.5 Ojena, S. M. ,"A New Silicone Rubber Casting Material Designed for Forensic Science Application", Journal of Forensic Sciences, JFSCA, Vol. 29, No. 1, Jan. 1984, pp. 317-321.

COPYRIGHT © 2023
VIRGINIA DEPARTMENT OF FORENSIC SCIENCE

5.6 Documentation

Along with case file notes, documentation for fracture match cases will include one or more of the following:

- Photographs of the fracture match
- Detailed sketches of the fracture match

5.6.1 Each of the above is to be documented within the case notes and should have legible markings for identification which are also described in the notes if not obvious from the photograph. These notations may be made directly on photographs or sketches in the notes.

5.6.2 The method of documentation should be appropriate for each individual case and will be left to the discretion of the examiner.

5.7 Report Wording

5.7.1 Methods: Techniques utilized in the analysis will be listed on the report.

5.7.1.1 Items _____ and _____ were examined visually and using stereomicroscopy and polarized light.

5.7.1.2 A cast of Item 1 was created, designated as Item 1A, and compared to Item 2. Items 1, 1A and 2 were examined visually and using stereomicroscopy.

5.7.2 The results of the comparison, an appropriate conclusion statement, and level of association shall be reported with a "Terminology Key for Comparative Examinations" on the Certificate of Analysis.

5.7.3 If the samples are DISSASSOCIATED, the reason for elimination (differences in color, physical properties, chemical properties, shape, construction, design characteristics, etc.) shall be included in the conclusion:

Items __ and __ could not be associated due to differences in _____. (color, width, construction, thickness, etc.) (**Exclusion/Elimination**).

UNCONTROLLED COPY

5.7.4 If the compared samples are found to PHYSICALLY FIT:

- Examination and comparison of Items 1 and 2 revealed corresponding edges and features. These Items physically fit to form one continuous piece when corresponding edges and/or features are re-aligned in a specific sequence. It is therefore concluded that Items 1 and 2 were, at one time, a portion of a single unit (**Level I - Physical/Fracture Match**).

- One (1) of the eleven (11) fragments in Item 2 and the Item 3 broken headlamp assembly were found to physically fit to form one continuous piece when corresponding edges and/or features are re-aligned in a specific sequence. It is therefore concluded that one of the Item 2 fragments and the Item 3 headlamp were, at one time, a portion of a single unit (**Level I - Physical/Fracture Match**).

5.7.5 In the absence of a disassociation, with NO PHYSICAL FIT:

5.7.5.1 The absence of a physical fit does not imply that the compared items originated from different sources.

COPYRIGHT © 2023

5.7.5.2 Additional testing will be conducted, when possible and appropriate, to compare properties.

5.7.5.3 If the additional testing will not be conducted, an explanation must be included explaining why no further examination was performed.

VIRGINIA DEPARTMENT OF FORENSIC SCIENCE

5.7.5.3.1 Items 1 and 2 could not be physically fitted together. Items 1 and 2 (exhibited physical features that partially realign, show areas of discrepancy, display simultaneous similarities and differences, or have insufficient individual characteristics that hinder the ability to determine the presence or absence of a physical fit); therefore, no meaningful conclusion could be reached as to the possibility of shared sources (**Inconclusive**).

Items 1 and 2 share sufficient class characteristics to warrant additional comparison examinations, however, …

5.7.5.3.1.1 the physical and chemical comparison of this material is not performed by the Virginia Department of Forensic Science.

5.7.5.3.1.2 no further analysis was conducted to compare Items 1 and 2 based on the above results of Items 3 and 4.

5.7.5.3.1.3 no further analysis was conducted to compare Items 1 and 2 following discussion with/at the request of [Title First initial Last name] on [Month Day, Year].

5.7.5.4 If the additional testing is not conducted by the same Trace Evidence examiner:

Items 1 and 2 could not be physically fitted together. Items 1 and 2 (exhibited physical features that partially realign, show areas of discrepancy, display simultaneous similarities and differences, or have insufficient individual characteristics that hinder the ability to determine the presence or absence of a physical fit); therefore, no meaningful conclusion could be reached as to the possibility of shared sources (**Inconclusive**).

Items 1 and 2 share sufficient class characteristics to warrant additional comparison examinations. The results of additional examinations will be reported separately.

5.7.5.5 If the additional testing is conducted by the same Trace Evidence examiner, both the physical fit conclusion and any additional conclusion(s) reached from further testing will be reported.

UNCONTROLLED COPY

5.7.5.5.1 Items 1 and 2 could not be physically fitted together. Items 1 and 2 were consistent in physical and chemical properties (or shape, construction, design characteristics, and so forth, as applicable). Based on the portions examined, it was concluded that _____ (**Level III – Association with Discriminating Characteristics**). This type of conclusion was reached because _____.

5.7.5.5.2 Items 1 and 2 could not be physically fitted together. Items 1 and 2 were consistent in color and overall construction and similar in chemical properties due to slight differences in organic composition. Based on the pieces examined, it was concluded that _____ (**Level III – Association with Discriminating Characteristics**). This type of conclusion was reached because _____.

5.7.5.6 The resulting comparative exam may result in one of the following levels of association:

COPYRIGHT © 2023

5.7.5.6.1 CONSISTENT/SIMILAR:

5.7.5.6.1.1 Level II - Association with Highly Discriminating Characteristics
5.7.5.6.1.2 Level III - Association with Discriminating Characteristics
5.7.5.6.1.3 Level IV - Association with Limitations

VIRGINIA DEPARTMENT OF FORENSIC SCIENCE

5.7.5.6.2 INCONCLUSIVE

5.7.5.6.3 EXCLUSION

5.7.5.6.3.1 Exclusion with Limitations
5.7.5.6.3.2 Exclusion/Elimination

5.7.5.7 Refer to specific subdiscipline sections or Section 20 for further guidance.

UNCONTROLLED COPY

6 GENERAL CHEMICAL

6.1 Analytical Approach

6.1.1 Items submitted for general chemical examinations are the miscellaneous samples not included in another examination (e.g., greases, glues, cosmetics, unknown substances). They are often referred to as any chemistry-related examination requested of the laboratory that is not a request for the identification of a controlled substance.

6.1.2 While some evidence types are encountered on a fairly routine basis, others may require method development at the time the case is being worked. No procedures manual could encompass methods for every general chemical evidence type analyzed. This section will provide analysis schemes for some evidence types that have been analyzed with some regularity.

6.1.3 Good scientific principles and a logical analysis scheme, along with appropriate consultations with the supervisor, are applied to those evidence types that have not been encountered before based on the type and amount of evidence submitted and the case information received. Generally speaking, a visual macroscopic/ microscopic examination will be performed (stereo, compound, comparison and polarizing microscopes) for color, texture, viscosity, morphology, optical properties and homogeneity. Record the general amount of evidence received (e.g., the weight or volume).

6.1.4 Analytical approaches will vary depending upon the amount and type of sample received. With a limited amount of sample, nondestructive testing is performed first. Solubility/miscibility tests with organic/inorganic and polar/nonpolar solvents (e.g., water, carbon disulfide, pentane, acetone, chloroform) may be done. The pH of water soluble/miscible samples may be taken using a pH meter. Indicator strips (pH paper) may be used to screen for acids and bases prior to using a pH meter. Microchemical tests may be performed as indicators of a class of compounds present (e.g., for sulfates, chlorides, nitrates, sugars).

6.1.4.1 Reagents must pass the QC check prior to use in casework.

6.1.5 Necessary instrumentation is used to identify or to compare samples.

6.1.6 It may not be possible to fully identify an unknown. However, general classification is usually possible. When comparison samples are submitted or obtained, it may be possible to report that the unknown shares the same physical and/or chemical properties as the comparison sample. Reported conclusions shall be based on the samples selected and examined.

6.2 Minimum Standards and Controls, Documentation, Report Wording

6.2.1 These are dependent upon the type of evidence being submitted and the examinations being performed.

6.2.2 Generally, blanks, reference standards and controls are run along with the evidence items, and all of these results are recorded in the case file notes. All documentation is included to support the conclusion made. Instrument output requirements are detailed throughout other sections of this manual. Report wording is as consistent as possible with previously reported exams of a given type. When reporting conclusions based on the examination of "new" evidence types, the supervisor and/or technical reviewer will help ensure that the report wording is accurate, clear and concise.

6.3 Acids and Bases

6.3.1 Purpose

To identify common acids and bases that may be encountered in casework.

6.3.2 Safety Considerations

COPYRIGHT © 2023 VIRGINIA DEPARTMENT OF FORENSIC SCIENCE

UNCONTROLLED COPY

6.3.2.1 Acids and bases, e.g., HCl, HNO_3, H_2SO_4, H_3PO_4, NH_4OH, NaOH, KOH, may be encountered as evidence. These are very corrosive. Eye and skin protection must be used.

6.3.2.2 Acids may be very reactive with chlorates, acetone, flammable liquids and water. Extreme care must be taken when mixing these compounds.

6.3.3 Minimum Standards and Controls

6.3.3.1 Treat the questioned samples and any control/standard samples in the same manner.

6.3.3.2 When performing extractions analyze a blank of the extraction liquid and an undisturbed portion of the substrate, if possible.

6.3.3.3 Controls and blanks will be run with each case when performing testing with microchemical spot test reagents. These results will be recorded in the case file notes.

6.3.4 Analytical Procedures

COPYRIGHT © 2023

6.3.4.1 If the sample is a solid or is on a solid substrate, dissolve in DI water. If the sample is a liquid, check if it is miscible with water by adding a small amount of the liquid to DI water.

6.3.4.2 A preliminary pH may be determined with pH paper. If an acid or base will be identified, the pH shall be determined using a pH meter.

VIRGINIA DEPARTMENT OF FORENSIC SCIENCE

6.3.4.3 If the pH is acidic proceed as follows:

6.3.4.3.1 Hydrochloric acid: Test unknown with a few drops of silver nitrate reagent. A white precipitate indicates the presence of a chloride. An optional follow-up test can be performed on the white precipitate by adding drops of ammonium hydroxide and noting whether it is soluble or insoluble. A white precipitate that is soluble in ammonium hydroxide further indicates the presence of chloride.

6.3.4.3.2 Sulfuric acid: Test unknown with a few drops of barium chloride reagent. A white precipitate indicates the presence of a sulfate. An optional follow-up test can be performed on the white precipitate by adding drops of concentrated acetic acid and noting whether it is soluble or insoluble. A white precipitate that is insoluble in concentrated acetic acid further indicates the presence of sulfate.

6.3.4.3.3 Nitric acid: Test unknown with a few drops of diphenylamine reagent. Immediate development of a deep blue color indicates the presence of nitrates.

6.3.4.3.4 Phosphoric acid: Test unknown by placing 6 ml of acetone in a small test tube. Place 3 drops of unknown liquid into the test tube and mix. Add 3 drops of ammonium hydroxide and mix. A precipitate indicates the presence of ammonium phosphate dibasic, $(NH_4)_2$ HPO_4, if phosphoric acid is present.

6.3.4.3.5 Specific anion test strips (such as EM Quant®) may be used in place of, or in addition to, any of the above microchemical tests. While these test strips may have an expiration date, they will continue to be used as long as they test positive with an appropriate known acid.

6.3.4.4 If the pH is basic proceed as follows:

6.3.4.4.1 Ammonium hydroxide: Test the unknown with Nessler's reagent. The formation of an orange to brown precipitate indicates the presence of ammonium ions. Ammonium test strips (such as EM Quant®) may be used in place of, or in addition to, the Nessler's reagent test.

UNCONTROLLED COPY

6.3.4.4.2 Sodium hydroxide: Basic pH (≥ 11).

- When the sample is in pellet/solid form, sodium hydroxide is identified using XRD. The sample may be further analyzed using SEM-EDS, if appropriate.

6.3.4.4.3 Potassium hydroxide: Basic pH (≥ 11).

- When the sample is in pellet/solid form, potassium hydroxide is identified using XRD. The sample may be further analyzed using SEM-EDS, if appropriate.

6.3.4.4.4 A report may be generated at this time if the results of the pH test and the spot tests are sufficient for the case report.

6.3.4.5 If further characterization of the acid/base is necessary, then the extract and/or the precipitate from the microchemical testing may be run using XRD, SEM-EDS, IC, or FTIR, as appropriate.

COPYRIGHT © 2023

6.3.4.6 Ammonium Nitrate: Ammonium nitrate is not a strong acid or base, but it can be encountered with acids and bases, and its analysis is treated similarly. Unknowns can be presumptively tested with Diphenylamine (DPA) and/or Nessler's reagent. Ammonium test strips (such as EM Quant®) may be used in place of, or in addition to, the Nessler's reagent test. With DPA, immediate development of a deep blue color indicates the presence of nitrates. With Nessler's reagent, the formation of an orange to brown precipitate indicates the presence of ammonium ions. Ammonium nitrate is identified using XRD.

VIRGINIA DEPARTMENT OF FORENSIC SCIENCE

6.3.4.6.1 When ammonium nitrate is in pellet/solid form, XRD shall be utilized.

6.3.5 Report Wording

6.3.5.1 If the pH is neither acidic nor basic report:

No acids or bases were identified in Item ___ or the Item ___ extract. (As appropriate)

6.3.5.2 If the results of the pH test and the spot tests are sufficient for the case report:

The Item ___ extract was indicative of _____ (name of acid or base).

Item ____ was an acidic solution that was indicative of containing _____ (name of acid or base).

6.3.5.3 If identifying the acid or base:

Item 1 was an acidic/basic solution that contained _____ (name of acid or base).

Item 1 was identified as (sodium hydroxide, ammonium nitrate, etc.).

Item 1 was an acidic solution that contained dilute sulfuric acid, a listed substance in § 18.2-248 (J). Sulfuric acid is commonly found as battery acid and drain cleaners.

6.3.5.3.1 Alternatively, the following may be used as appropriate:

Item 1 was an acidic/basic solution consistent with _____ (name of acid or base).

6.3.5.3.2 If appropriate, common sources of the acid/base may be included:

UNCONTROLLED COPY

- Hydrochloric acid, commonly found as muriatic acid.
- Sulfuric acid, commonly found as battery acid and drain cleaners.

6.3.5.4 Techniques used in the analysis shall be identified in the body of the report. See ¶ 20.4 for example wording.

6.3.6 References

6.3.6.1 Anger, V., and Feigl, F., Spot Tests in Inorganic Analysis, 6th ed., Elsevier Publishing Company: Amsterdam, The Netherlands, 1972.

6.3.6.2 Illinois State Police, Trace Chemistry Procedures Manual, Common Acids Identification, February 1, 1997.

6.3.6.3 Jungreis, Ervin; "Spot Test Analysis, Clinical, Environmental, Forensic, and Geochemical Applications", Volume 75, 1985.

COPYRIGHT © 2023

6.4 Bank Dyes

6.4.1 Purpose

VIRGINIA DEPARTMENT OF FORENSIC SCIENCE

The most common exploding bank dye packs encountered in casework have contained the red dye, 1-methylaminoanthraquinone (MAAQ), and at times the lachrymator, o-chlorobenzylidenemalononitrile (CS). The red dye, 1-methylaminoanthraquinone, may also be found in devices containing red smoke mixtures. This procedure describes a means of extracting and identifying these components.

6.4.2 Safety Considerations

6.4.2.1 Care should be taken as MAAQ is a prolific dye that does not wash off with water.

6.4.2.2 Lachrymators, such as CS, are compounds that irritate the eyes and mucous membranes and should be handled accordingly.

6.4.3 Minimum Standards and Controls

6.4.3.1 Treat the questioned samples and any control/standard samples in the same manner.

6.4.3.2 When performing extractions also analyze a blank of the extraction liquid and an unstained portion of the substrate, if possible. If an unstained portion of the substrate is not possible, analyze the extraction solvent as the negative control.

6.4.4 Analytical Procedures

6.4.4.1 Visually examine the evidence for any red, red-orange or pink stains.

6.4.4.2 Examine the evidence using short and long wave UV light, as needed.

6.4.4.3 Cut out small areas containing the stains of interest and extract with a minimum volume of chloroform or methanol.

6.4.4.3.1 If the areas of interest cannot be cut out, rub cotton swabs wetted with solvent (methanol or chloroform) over the stained areas.

6.4.4.3.2 If the stained area is dark and powdery, scrape the material into a sample vial and add solvent.

UNCONTROLLED COPY

6.4.4.4 If the evidence is dark in color and no stains are visible, rub cotton swabs wetted with solvent over a small area of the item at a time. Observe any red, red-orange or pink color transferred to the swab and cut out these areas for extraction. If no color is transferred to the swab, continue swabbing additional areas as appropriate.

6.4.4.4.1 If no color is transferred to any of the swabs, no further testing is necessary.

6.4.4.5 If stained areas do not extract into methanol or chloroform, no further testing is necessary.

6.4.4.6 Use the same approximate size of unstained material, if available, for the substrate control or analyze the extraction solvent or unstained swabs wetted with extraction solvent.

6.4.4.7 If necessary, concentrate the extract to as dark a red color as possible. Concentrate the blank a like amount.

6.4.4.7.1 Do not take the extract to dryness because of the volatility of CS.

COPYRIGHT © 2023

6.4.4.8 If the extract is relatively "clean", the red dye may be analyzed using FTIR.

6.4.4.9 Analyze the extract using GC-MS.

VIRGINIA DEPARTMENT OF FORENSIC SCIENCE

6.4.4.10 If no peaks are present with the proper retention times and spectral data of CS or MAAQ, no further analysis is required.

6.4.4.11 If either or both compounds were present on GC-MS, analyze the extract on a semi-polar or polar GC or GC-MS column.

6.4.4.12 Both the dye and the lachrymator (when present) should be identified when possible.

6.4.5 Report Wording

6.4.5.1 If a known bank dye pack is submitted and the dye is soluble in chloroform or methanol and none of the stains on the evidence extract into the solvent:

The red stains on Item ____ could not be associated with the red dye in Item ____ due to differences in physical properties.

6.4.5.2 If a known bank dye pack is submitted, the dye is soluble in chloroform or methanol, and the stains on the evidence DO extract into the solvent:

The Item _ and _ extracts each contained 1-methylaminoanthraquinone, a red dye [, and o-chlorobenzylidenemalononitrile, a lachrymator].

6.4.5.3 If NO known bank dye pack is submitted and all of the stains on the evidence do NOT extract into chloroform or methanol:

The red stains on Item ____ could not be associated with the red dye commonly used in exploding bank dye packs due to differences in physical properties.

6.4.5.4 If stains extract but are not identified as CS and/or MAAQ:

6.4.5.4.1 No 1-methylaminoanthraquinone, a red dye commonly found in exploding bank dye packs, was identified in the Item ___ extract.

6.4.5.4.2 No 1-methylaminoanthraquinone or o-chlorobenzylidenemalononitrile, common components of exploding bank dye packs, was identified in the Item ___ extract.

UNCONTROLLED COPY

6.4.5.4.3 If appropriate: The extract of Item ____ could not be associated with _____ due to differences in chemical properties.

6.4.5.5 If CS and/or MAAQ are identified:

The extract of Item ____ contained 1-methylaminoanthraquinone, a red dye, and o-chlorobenzylidenemalononitrile, a lachrymator. It should be noted that these materials are commonly found in exploding bank dye packs.

6.4.5.6 Techniques used in the analysis shall be identified in the body of the report. See ¶ 20.4 for example wording.

6.4.6 References

6.4.6.1 Martz, R.M., Reutter, D.J., and Lasswell, III, L.D., "A Comparison of Ionization Techniques for Gas Chromatography/Mass Spectroscopy Analysis of Dye and Lachrymator Residues from Exploding Bank Security Devices", *Journal of Forensic Sciences*, Vol. 28, No. 1, January 1983, pp. 200-207.

6.4.6.2 Personal Communication, ICI Americas, Inc., August 1981.

COPYRIGHT © 2023
VIRGINIA DEPARTMENT OF FORENSIC SCIENCE

6.5 Nitrous Oxide and Halogenated Hydrocarbons

6.5.1 Purpose

To identify common gases that may be encountered in casework. Some gases are noxious chemical substances and can be used to become intoxicated. Noxious chemicals are not considered controlled substances and are covered in section § 18.2-264 in the Code of Virginia.

6.5.2 Safety Considerations

6.5.2.1 Gases may be encountered as evidence as contained under pressure. Use caution if cans or canisters require puncturing to gain access to gas.

6.5.2.2 Gases may be flammable or explosive in nature. Do not store or work near sources of heat or fire.

6.5.2.3 Gases can be harmful or fatal if inhaled and should be handled accordingly.

6.5.3 Minimum Standards and Controls

6.5.3.1 Treat the questioned samples and any control/standard samples in the same manner.

6.5.3.2 Gases must remain in airtight containers for preservation purposes. Selection of container should be considered when gases must be transferred to additional containers for analysis purposes.

6.5.3.3 Air/System blanks shall be run for each instrumental analysis performed.

6.5.4 Analytical Procedures

6.5.4.1 Visually examine the appearance of the canister/vessel (safety tab and/or straw present or missing, nozzle tampered with, etc.). For cans, canisters, cartridges, or other similar containment vessels, a weight may be noted during the documentation of physical properties.

UNCONTROLLED COPY

6.5.4.2 If the sample cannot be introduced directly into the instrument from its canister/vessel, prepare sample vials for extraction purposes accordingly.

6.5.4.3 When identifying a gas, corresponding retention time data and mass spectra for samples and standards are necessary from at least one chromatography system. Additionally, FTIR spectra from the sample and standard shall be collected. Corresponding retention time data and mass spectra from a second chromatography system, with a different polarity column, may be used to replace the FTIR data.

6.5.5 Report Wording

6.5.5.1 When providing a physical description of the container:

Item 1 consisted of one can of "Dust-Off Compressed-Gas…". As received, the safety tab and straw were not present.

6.5.5.2 If testing is negative for a gas of interest:

COPYRIGHT © 2023

No (type of gas) was identified in Item 1.

6.5.5.3 If identifying the gas of interest:

VIRGINIA

Item 1 contained nitrous oxide.

DEPARTMENT

1,1-Difluoroethane, a fluorinated hydrocarbon, was identified in Item 1. Fluorinated hydrocarbons are listed in § 18.2-264.

OF

6.5.6 Techniques used in the analysis shall be identified in the body of the report. See ¶ 20.4 for example wording.

FORENSIC SCIENCE

6.6 Red Phosphorus and Iodine

6.6.1 Purpose

To identify iodine and red phosphorous that may be encountered in evidence which typically originates from clandestine methamphetamine laboratories.

6.6.2 Safety Considerations

6.6.2.1 Iodine and red phosphorus are frequently encountered in reaction mixtures. Care should be taken when handling these samples.

6.6.2.2 Red phosphorus is a combustible solid, that, while stable, may be ignited by heat, friction, physical impact, static electrical sparks, or oxidizing reagents.

6.6.2.3 Red phosphorus should not be stored next to peroxides, hydroxides, halogens or nitric acid.

6.6.2.4 Care should be taken when performing an ignition test for red phosphorus. Only a small amount of sample should be used.

6.6.3 Minimum Standards and Controls

6.6.3.1 Extractions

6.6.3.1.1 Previously cleaned glassware should be rinsed with the extracting solvent.

UNCONTROLLED COPY

6.6.3.1.2 A solvent blank shall be run at the same time as the sample extract. The same volume of solvent used for the sample extraction should be used for the blank.

6.6.3.1.3 If the sample extract is filtered or evaporated, the blank shall be handled in a like manner.

6.6.4 Analytical Procedures

6.6.4.1 Evaluate the submitted items to determine which items to analyze. When working clandestine methamphetamine laboratories, refer to the Code of Virginia, § 18.2-248(J) regarding precursor chemicals to assist in determining the best analytical scheme.

6.6.4.2 Characterize the sample using the appropriate techniques (e.g., stereomicroscopy, solubility, miscibility, weighing).

6.6.4.3 Red Phosphorus

COPYRIGHT © 2023

6.6.4.3.1 Red phosphorus is the primary component in the striker plate on strike-on-box matches. The color of red phosphorous varies but is most often dark red, purple or purple-gray.

6.6.4.3.2 Ignition Test

VIRGINIA DEPARTMENT OF FORENSIC SCIENCE

6.6.4.3.2.1 This test is intended to mimic a strike on a box match. Strike on box matches are composed of red phosphorus and ground glass.

6.6.4.3.2.2 Place a small portion of the sample on a course, ground glass surface (e.g., glass slide surface with frosted labeling), and strike a match across the slide. Record the results in the case notes. Ignition of the match indicates the presence of red phosphorous.

- A negative control of a match and igniting surface shall be performed prior to the ignition test.

6.6.4.3.2.3 If the match does not ignite, washing the questioned sample may produce a more purified sample that will ignite. Prior to washing, prepare an “as is” portion of the sample for SEM-EDS analysis. Chloroform, acetone, and methanol are possible solvents for washing the sample because red phosphorus is essentially insoluble in these solvents. Rinse the sample multiple times and retry the ignition test once the sample has dried. Record results in case notes. If appropriate, a portion of the washed sample may also be analyzed using SEM-EDS.

6.6.4.4 Iodine

6.6.4.4.1 Iodine is frequently encountered in casework as elemental iodine, stains on coffee filters or other materials, reaction mixtures, or products such as iodine tincture or povidone-iodine solution.

6.6.4.4.2 Elemental iodine is a shiny, dark purple to black nonmetallic crystalline solid that frequently stains whatever it comes in contact with a dark purple, dark orange, brown-yellow, yellow-orange, or a similar color. Elemental iodine readily sublimes to a vapor at room temperature.

UNCONTROLLED COPY

6.6.4.4.3 Tincture of iodine is generally composed of an iodide salt (potassium or sodium) and elemental iodine dissolved in ethanol and water. To identify as tincture of iodine, the iodide salt and the ethanol need to be identified.

6.6.4.4.3.1 Physically and chemically consistent with wording may be used when ethanol is not identified but all of the other tests are performed.

6.6.4.4.4 Solubility test

Place a small portion of the solid sample or a portion of the stain separately in acetone and in chloroform. Record the solubility and any color change to the solvent in the case notes. A solution of elemental iodine in acetone will become yellow-orange to dark brown-orange in color. A solution of elemental iodine in chloroform will become purple-pink, pink-purple or violet in color. Stains or reaction mixture solids in solution with chloroform may become yellow to yellow-orange in color.

COPYRIGHT © 2023

6.6.4.4.5 Extractions

Samples such as stained coffee filters should be extracted using a solvent unless recoverable material is present. The solvent extract of the sample and the solvent blank shall both be dried down and analyzed using SEM-EDS.

VIRGINIA DEPARTMENT OF FORENSIC SCIENCE

6.6.4.5 Instrumental analysis

6.6.4.5.1 For further characterization of the sample, use SEM-EDS, XRD, GC-MS, IC, or other technique, as appropriate.

6.6.4.5.2 When solid material is present in the sample (excluding neat samples of elemental iodine), a portion of the “as is” solid should be analyzed using SEM-EDS because many solids encountered in clandestine methamphetamine laboratories are mixtures. If appropriate, a portion of a washed sample may be analyzed using SEM-EDS.

6.6.4.5.3 For liquid samples, residues from an evaporated portion of the sample should be analyzed using SEM-EDS.

6.6.4.5.4 When extractions are necessary, a portion of the dried solvent extract of the sample and a portion of the dried solvent negative control, or blank, should be analyzed using SEM-EDS.

6.6.4.5.5 Red phosphorus shall be identified using SEM-EDS.

6.6.4.5.6 Elemental iodine can be identified as iodine using XRD. When sending for instrument support, it is important to indicate that elemental iodine is suspected. Due to the nature of iodine sublimation, a sufficient amount of sample should be sent.

6.6.4.5.7 Tincture of iodine may be analyzed using XRD, GC-MS and GC.

6.6.4.5.7.1 If needed, confirm the presence of ethanol using GC-MS and GC.

6.6.4.5.7.2 Evaporate a portion of the sample (tincture solution) in a watch glass or evaporating dish. As the solvent evaporates, iodide salt will crystallize. Residual iodine may remain in liquid form in the evaporated sample. Acetone and chloroform solubility (with color

UNCONTROLLED COPY

change observations) can be conducted on a portion of the evaporated sample. The presence of elemental iodine in the evaporated sample is indicated by an orange color in acetone and a violet color in chloroform. The iodide salt is soluble in acetone but is insoluble in chloroform.

6.6.4.6 Report Wording

6.6.4.6.1 If red phosphorus is present (color and positive ignition test):

Item ___ contained red phosphorus, a listed substance in § 18.2-248(J).

6.6.4.6.2 If phosphorus is present but the ignition test was negative:

Item ___ contained phosphorus.

6.6.4.6.3 If elemental iodine is present:

COPYRIGHT © 2023

Item ___ contained iodine, a listed substance in § 18.2-248(J).

6.6.4.6.4 For tincture of iodine samples, if the iodide salt and ethanol have been identified:

VIRGINIA

Item ___ contained tincture of iodine, a listed substance in § 18.2-248(J).

DEPARTMENT

6.6.4.6.5 For tincture of iodine samples, if the iodide salt has been identified but ethanol has not:

OF

The liquid in Item ___ was physically and chemically consistent with tincture of iodine, a listed substance in § 18.2-248 (J).

FORENSIC SCIENCE

6.6.4.6.6 If iodine is present, but the original source cannot be determined:

Item ___ contained iodine, a listed substance in § 18.2-248(J).

The Item ____ extract contained iodine, a listed substance in § 18.2-248(J).

6.6.4.6.7 If no red phosphorus or iodine is present:

No (red phosphorus, iodine) was identified in Item _____.

6.6.4.6.8 If all substances listed in § 18.2-248(J) can be eliminated by physical properties and/or chemical testing use:

No substances listed in § 18.2-248(J) were identified in Item ____.

6.6.4.7 Techniques used in the analysis shall be identified in the body of the report. See ¶ 20.4 for example wording.

6.6.5 References

6.6.5.1 The Merck Index, Budavari, Susan, ed. et. al., Twelfth edition, Merck & Co., Inc., 1996, pg. 7508.

6.6.5.2 The United States Pharmacopeia, Nineteenth Revision, United States Pharmacopeial Convention Inc., Maryland, 1975, pgs. 258-259.

UNCONTROLLED COPY

6.7 Salt

6.7.1 Purpose

To identify sodium chloride (NaCl) and other salts that may be encountered in casework. The most routine cases requesting this examination are deer "baiting" cases, but the analysis scheme is readily applied to other situations as well. Samples submitted for this examination may consist of questioned crystalline material or soil samples suspected to have been adulterated with a questioned material.

6.7.2 Minimum Standards and Controls

6.7.2.1 Treat the questioned samples and any submitted control/standard samples in the same manner.

6.7.2.2 Controls and blanks will be run with each case when performing testing with microchemical spot test reagents. These results will be recorded in the case file notes.

6.7.2.3 Extraction procedures will not be conducted on questioned soil samples without an appropriate control soil sample.

COPYRIGHT © 2023

6.7.3 Analytical Procedures

6.7.3.1 Examine the sample(s) with the aid of the stereomicroscope to determine if there are any obvious cubic crystals present. If cubic crystals are observed, remove them and perform identification by XRD.

VIRGINIA DEPARTMENT OF FORENSIC SCIENCE

6.7.3.1.1 Some deer baiting products contain carbonates or bicarbonates as major components. Samples of this type are generally crystalline powders. Questioned soil will not be extracted for carbonates or bicarbonates. If applicable, a pH measurement may be performed on the sample as a screening tool. If crystalline material is observed, remove and examine using XRD.

6.7.3.2 If cubic crystals are not observed, break up the sample material sufficiently to permit thorough wetting during the extraction process.

6.7.3.3 Weigh the samples. Use about one-half of the smallest sample's weight or approximately 50 grams, whichever is less, as the standard weight for all extraction samples.

6.7.3.4 Place each sample in a labeled beaker and add enough DI water to each beaker to cover the sample. Stir and allow samples to stand for 10 minutes.

6.7.3.5 Centrifuge and/or filter the samples and transfer each extract to a clean, labeled beaker.

6.7.3.6 Chloride ion screening: Perform silver nitrate spot test on the extract and record the results. If no precipitate forms, the results are negative and no further testing for NaCl is necessary.

6.7.3.6.1 If the results are indicative of a chloride, remove a portion of the extract for IC analysis. Evaporate the remaining portion to dryness and analyze the residue by XRD and, if necessary, SEM-EDS.

6.7.3.7 Salt will only be reported as "identified" in extracted samples when found in the questioned sample and when NOT found in the accompanying control sample.

6.7.4 Report Wording

6.7.4.1 If testing is negative for sodium chloride:

No sodium chloride was identified in the Item __ extract.

UNCONTROLLED COPY

6.7.4.2 If sodium chloride crystals are present:

The white crystalline material in Item __ was identified as sodium chloride, commonly known as table salt.

6.7.4.3 If sodium chloride is identified from a water extract:

The extract of Item __ contained sodium chloride, commonly found in table salt.

6.7.4.4 If the RFLE does not contain a specific request for sodium chloride it may be appropriate to report:

No salts were identified in the Item __ extract.

6.7.4.5 Follow the above listed wording guidelines to report results of testing for carbonates as appropriate.

COPYRIGHT © 2023

6.7.4.6 Techniques used in the analysis shall be identified in the body of the report. See ¶ 20.4 for example wording.

6.8 Sugars

VIRGINIA DEPARTMENT OF FORENSIC SCIENCE

6.8.1 Purpose

To identify common sugars (such as sucrose, dextrose, fructose or lactose) that may be encountered in casework. Sugar may be encountered in the vandalism of motor vehicles by its addition to the fuel supply or the crankcase oil. Because the solubility of sugar in gasoline is so low (1.5 mg/L), a sampling of any solid residues in the fuel tank as well as the fuel or oil filters, as appropriate, should be included. Sugars may also be encountered as a cutting agent in controlled substance cases or as part of a sugar/chlorate mixture in improvised explosive devices.

6.8.2 Minimum Standards and Controls

6.8.2.1 Treat the questioned samples and any control/standard samples in the same manner.

6.8.2.2 When performing extractions also analyze a blank of the extraction liquid and an undisturbed portion of the substrate, if possible.

6.8.2.3 Controls and blanks will be run with each case when performing testing with microchemical spot test reagents. These results will be recorded in the case file notes.

6.8.3 Analytical Procedures

6.8.3.1 Stereoscopically examine the sample(s) to determine if there are any obvious crystals present and if the sample is homogeneous. If crystals are observed, remove them and perform solubility tests (aqueous/organic, such as water and chloroform, sugars are soluble in water).

6.8.3.2 If solid material is present, it may be necessary to wash away residue left on the solid material (for instance, gasoline in vandalism cases). Sugar is not soluble in pentane and this, or another suitable solvent, may be used.

6.8.3.3 If there is no solid material present, perform a water extraction of the sample containing the suspected sugar. (If the case involves an improvised explosive device, follow the procedures for explosives analysis.) Evaporate to dryness.

UNCONTROLLED COPY

6.8.3.4 Perform either the Fehling's, triphenyltetrazolium chloride, naphthol or anthrone microchemical spot test. (With Fehling's or triphenyltetrazolium chloride, remember to acidify sucrose when performing the test. Run both sucrose and a known reducing sugar as positive controls.) A negative test is indicative of no sugars being detected.

6.8.3.4.1 Anthrone Microchemical Spot Test

Place several crystals of anthrone in a white spot plate. A powder sample, or an aqueous solution of the unknown, is added and mixed well. Three drops of sulfuric acid are added drop wise; a blue to blue-green color formation indicates the presence of sugar.

Notes: The color may take up to 5 minutes to form. Anthrone is normally used to detect carbohydrates. The test is most sensitive when a dry sample is ground with the anthrone prior to acid addition. Dilute water extracts are best evaporated to dryness prior to testing.

COPYRIGHT © 2023

6.8.3.5 Use the FTIR or the XRD for identification.

6.8.3.6 Alternatively, use the trimethylsilylimidazole (TMSI) in pyridine derivatization procedure from Pierce Chemical Company on the GC (polar or semi-polar column) and the GC-MS.

VIRGINIA DEPARTMENT OF FORENSIC SCIENCE

6.8.4 Report Wording

6.8.4.1 If the questioned sample exhibits a negative microchemical spot test:

No sugars were identified in the Item ___ extract.

6.8.4.2 If the solid material or the extracted residues are identified as a sugar:

6.8.4.2.1 The Item ___ white crystalline solid was identified as _____ (name of sugar).

6.8.4.2.2 The Item ___ extract contained _____ (name of sugar).

6.8.4.3 If appropriate, common sources of the sugar may be named:

The Item ___ white crystalline solid was identified as sucrose, commonly referred to as table sugar.

6.8.4.4 Techniques used in the analysis shall be identified in the body of the report. See ¶ 20.4 for example wording.

6.8.5 References

6.8.5.1 Feigl, F. "Spot Tests In Organic Analysis" 7th edition, Elsevier Publishing, Amsterdam, 1966.

6.8.5.2 Jungreis, Ervin; "Spot Test Analysis, Clinical, Environmental, Forensic, and Geochemical Applications", Volume 75, John Wiley & Sons, 1985.

6.8.5.3 1986-1987 Handbook and General Catalog, Pierce Chemical Company, Rockford, IL.

6.8.5.4 Spots Tests, Systematic Analysis of Low Explosives, Bureau of Alcohol, Tobacco and Firearms, 6/88.

6.9 Tapes and Adhesives

UNCONTROLLED COPY

6.9.1 Analytical Approach

6.9.1.1 The examiner is typically requested to compare a questioned tape/adhesive sample to a known tape/adhesive source. The adhesive may be received as a part of a pressure sensitive tape or as an independent sample of adhesive. Instead of Q versus K comparison, the examiner may be requested to provide information regarding the manufacturer or end use of a tape/adhesive. If a tape sample contains fiber reinforcement, the case will be assigned to a fiber examiner.

6.9.1.2 The examiner first conducts a macroscopic examination of the tape/adhesive evidence keeping in mind the potential for the presence of other evidence (e.g., fibers, hairs, fingerprints). If appropriate, a fracture match comparison can be conducted.

6.9.1.3 Tapes/adhesives can be characterized by a number of physical and chemical properties.

6.9.1.4 The size and condition of the evidence may affect the ability to compare all properties. If necessary, the examiner may attempt to detach tape that is folded onto itself by using heat from a heat gun/hair dryer, liquid nitrogen, a "Dust-Off"-type product or solvents such as hexane, methanol, or another appropriate solvent.

COPYRIGHT © 2023

6.9.1.5 During a macroscopic and microscopic examination, the examiner notes any physical properties which assist in characterizing the tape/adhesive. The adhesive and/or each component of the tape will be further compared with instrumental analysis as appropriate (e.g., fluorescence microscopy, FTIR, SEM-EDS, and XRD).

VIRGINIA DEPARTMENT OF FORENSIC SCIENCE

6.9.2 Macroscopic/Microscopic Examination of Tapes

6.9.2.1 Purpose

To examine submitted tape evidence on a macroscopic and microscopic scale, noting physical properties, generally as the first step in the characterization and comparison of questioned and known tape samples.

6.9.2.2 Minimum Standards and Controls

6.9.2.2.1 Clean tools and work areas are a must.

6.9.2.3 Analytical Procedures

6.9.2.3.1 Thoroughly clean the examination area prior to the evidence being retrieved.

6.9.2.3.2 The sample is examined visually and with a stereomicroscope and the physical properties of each tape sample are noted and recorded. The following physical properties, as applicable, will be noted, at a minimum, and may be recorded on the *Tape Worksheet*:

- width of tape in inches and millimeters
- color of backing
- color of adhesive
- texture of the backing
- thickness of the backing and adhesive in inches. (Overall thickness and thickness of backing alone.)
- any machine or calendering marks on the backing (Viewed with a polarizing stereomicroscope or a polarizing light attachment on the stereomicroscope)

6.9.2.3.3 If fiber reinforcement is present, note at a minimum the following physical properties, if applicable:

UNCONTROLLED COPY

- scrim pattern
- number of machine (warp) yarns per inch
- number of fill (weft) yarns per inch

6.9.2.3.3.1 The physical, chemical, and optical properties of the fibers will be compared and documented in accordance with the procedures for fiber examinations in Section 3.

6.9.2.3.4 Tape may be manipulated with forceps and may be dissected using a fine scalpel blade to allow the examiner to thoroughly characterize the physical properties.

6.9.2.3.5 An appropriate solvent may be used to separate the adhesive from the backing or fiber reinforcement (e.g., hexane for duct tape, methanol for black electrical tape).

6.9.2.3.6 Following removal of the adhesive, duct tapes must be cross-sectioned to determine layer structure, the known and questioned compared and observations recorded.

COPYRIGHT © 2023

6.9.2.3.7 Transparent tape backings should be visualized between polarizing films when comparing questioned vs. known. Vary the polarizing film directions with respect to one another and vary the orientations of the tape samples. Record observations. If the known and questioned cannot be eliminated, view the backings using the polarized light microscope and include "optical properties" into the appropriate report wording, as necessary.

VIRGINIA DEPARTMENT OF FORENSIC SCIENCE

6.9.2.3.7.1 The adhesive may be isotropic and, therefore, may not need to be removed. Brown packing tapes with clear film backings and colored adhesive must have the adhesive removed. If the adhesive is removed from the backing, mounting medium will be necessary for PLM observation of the backing.

6.9.2.3.7.2 Affix the tape to a glass slide such that both machine edges are visible. Using the PLM, determine the film orientation, extinction angle relative to the machine edge, and relative retardation for questioned and known transparent tapes. Caution should be taken when eliminating samples based on these optical properties if tapes have been stretched during use or have materials in the adhesive that obscures observations.

6.9.2.3.7.2.1 Film orientation is determined by viewing the tape backing under crossed polars and rotating the film ~ 5 degrees off fullest extinction. Biaxially orientated (BO) films will appear with crossed markings due to the bidirectional stretching. Monoaxially oriented (MO) films will appear with marks in only one direction. Un-oriented films will appear isotropic under crossed polars.

6.9.2.3.7.2.2 The extinction angle relative to the machine edge is determined by viewing the tape backing under crossed polars. Align the machine edge of the tape backing with the north-south eyepiece reticle. The relative extinction angle (in degrees) is the difference between this stage position and

UNCONTROLLED COPY

the stage position when rotated to its fullest extinction position.

6.9.2.3.7.2.3 The relative retardation is determined by viewing machine edges mounted side-by-side on the stand-alone PLM. Under crossed polars, rotate the slide to the tapes' brightest position and document the color(s). Subtle differences in thickness and birefringence may be accentuated with the use of a full wave plate, a 4 order Berek compensator, and/or a 20 order Berek compensator.

6.9.2.3.8 If any meaningful differences are observed between the questioned and known tapes, the examiner can discontinue the analysis.

6.9.3 Macroscopic/Microscopic Examination of Adhesives

COPYRIGHT © 2023

6.9.3.1 Purpose

To examine submitted adhesive evidence when no associated tape backing is present on a macroscopic and microscopic scale, noting physical properties, generally as the first step in the characterization and comparison of known and questioned adhesive samples.

VIRGINIA DEPARTMENT OF FORENSIC SCIENCE

6.9.3.2 Minimum Standards and Controls

6.9.3.2.1 Clean tools and work areas are a must.

6.9.3.3 Analytical Procedures

6.9.3.3.1 Thoroughly clean the examination area prior to the evidence being retrieved.

6.9.3.3.2 The sample is examined visually and with a stereomicroscope and the physical properties of each adhesive sample are noted.

6.9.3.3.3 Determine the solubility of the adhesive material in at least hexane, toluene and methanol.

6.9.3.3.4 The sample is examined with a compound microscope and observations recorded.

6.9.3.3.5 If any meaningful differences are observed between the questioned and known adhesives, the examiner can discontinue the analysis.

6.9.4 Fluorescence

6.9.4.1 Safety Considerations

Do not look directly into the fluorescence source.

6.9.4.2 Analytical Procedure

6.9.4.2.1 Some tape backings and adhesives fluoresce when exposed to different wavelengths of light. Of those tapes and adhesives which fluoresce, the observed color and approximate intensity of emission under different excitation wavelengths are noted. Fluorescence can be caused by dyes, pigments, chemical structures, other additives or impurities.

UNCONTROLLED COPY

6.9.4.2.1.1 Fluorescence QC procedure:

- Perform fluorescence QC check prior to using the fluorescence microscope for casework. Use the fluorescence QC check sample and record observations on the fluorescence worksheet. If the fluorescence QC check fails to produce acceptable colors or intensity, troubleshoot the fluorescence microscope as appropriate and repeat the QC check. If the QC check continues to fail, take the fluorescence microscope out of service until the problem is resolved.

- Fluorescence cubes to be used are WU (wide UV – range 330 – 385nm), WBV (wide blue violet – range 400 – 440nm), WB (wide blue – range 450 – 480nm) and WG (wide green – range 510 – 550nm). Record observations on a fluorescence worksheet.

COPYRIGHT © 2023

6.9.4.2.2 Tape backings and adhesives may be examined in cross-section view or separately, however, questioned and known samples must be examined simultaneously; side-by-side using the stand-alone polarized light microscope with the room lights off.

VIRGINIA DEPARTMENT OF FORENSIC SCIENCE

6.9.4.2.3 Caution should be taken when eliminating samples based on fluorescence data alone. Detailed notes explaining the basis for the elimination are a must. Eliminations based on fluorescence will be reported as “due to differences in fluorescence”.

6.9.5 Instrumental Analysis

6.9.5.1 FTIR

6.9.5.1.1 Safety Considerations

6.9.5.1.1.1 Do not look directly into the laser source.

6.9.5.1.1.2 The MCT detector for the microscope accessory must be cooled with liquid nitrogen. Insulated gloves and safety glasses shall be worn when filling the transport Dewar as well as the instrument reservoir.

6.9.5.1.2 Minimum Standards and Controls

6.9.5.1.2.1 Ensure that the QC has been performed.

6.9.5.1.2.2 Replicate analyses may be employed to ensure reproducibility or to demonstrate variability within a sample.

6.9.5.1.3 Analytical Procedures

6.9.5.1.3.1 Remove the adhesive from the backing. Obtain spectra from both sides of the known and questioned tape backings by using the ATR. When more than one layer is indicated by cross-sections and/or ATR, obtain spectra from each layer of a flattened cross-section using the microcompression cell with diamond windows, when possible.

UNCONTROLLED COPY

- If a layer is too thin to isolate, obtain data for this layer via a composite with an adjacent layer.

6.9.5.1.3.2 Obtain spectra of the known and questioned adhesives/tape adhesives by using either the ATR or the microcompression cell with diamond windows.

6.9.5.1.3.3 The spectra for the known and questioned layers are compared. If any meaningful differences are observed in the spectra of the questioned and known sample, the examiner can discontinue the analysis.

6.9.5.2 SEM-EDS

6.9.5.2.1 If known and questioned tape backings and/or adhesives are generally in good condition, they will be referred for elemental composition comparison.

COPYRIGHT © 2023

6.9.5.2.2 Both sides of the backing, when more than one layer is indicated, and/or adhesive are mounted on the carbon adhesive tape which is affixed to the aluminum stub.

6.9.5.2.3 A representative X-ray spectrum is collected of each sample (K and Q). A hard copy is printed to document the elemental composition.

VIRGINIA DEPARTMENT OF FORENSIC SCIENCE

6.9.5.2.4 Comparison of K and Q samples is made on a qualitative basis.

6.9.5.3 XRD

6.9.5.3.1 This instrumental technique is generally applicable for duct tape comparisons and manufacturer identification of duct tapes. It may also be useful for the comparison of some other types of tapes such as those with adhesives containing fillers (e.g., masking tape).

6.9.5.3.1.1 Duct tape samples that are generally in good condition will be referred for XRD analysis.

6.9.5.3.1.2 Other tapes with adhesives containing fillers will also be referred.

6.9.5.3.1.3 The examiner should consider the use of this technique with adhesives not associated with tapes as well.

6.9.5.3.2 Results are included with the Instrument Support Request form.

6.9.5.4 References

6.9.5.4.1 "Adhesive Tape Analysis: Establishing the Evidential Value of Specific Techniques", Maynard, P., Gates, K., Roux, C., and Lennard, C., *Journal of Forensic Sciences*, Vol 46 (2), 2001, pp. 280-287.

6.9.5.4.2 "Duct Tape Analysis as Trace Evidence", Snodgrass, H., Proceedings of the International Symposium on the Forensic Aspects of Trace Evidence, June 1991, pp. 69-73.

6.9.5.4.3 "Forensic Analysis of Duct Tape", Pribush, R.A., Walson, R.P., and Schmitz, J.J., *Scanning*, Vol 26 (3), 2004, pp. 147-8.

6.9.5.4.4 "Forensic Characterization of Black Polyvinylchloride Electrical Tape", Keto, R.O., *Crime Laboratory Digest*, Vol 11 (4), 1984, pp. 71-74.

UNCONTROLLED COPY

6.9.5.4.5 "Forensic Examination of Duct Tape", Benson, J.D., Proceedings of the International Symposium on the Analysis and Identification of Polymers, July-August 1984, pp. 145-146.

6.9.5.4.6 "Hand-Sectioning and Identification of Pressure-Sensitive Tapes", Teetsov, A.S., Stellmack, M.L., *Modern Microscopy Journal*, 30 June 2004.

6.9.5.4.7 The Forensic Analysis of Paints and Tapes (Training Materials) F.B.I., August 1999.

6.9.5.4.8 The Forensic Analysis of Paints and Tapes (Training Materials) F.B.I., June 2002.

6.9.5.4.9 "The Forensic Value of Duct Tape Comparisons", Smith J., *Midwestern Association of Forensic Scientists Newsletter*, Vol 27 (1), 1998, pp. 28-33.

6.9.5.4.10 Smith, Jenny M., "Forensic Examination of Pressure Sensitive Tape", Robert D. Blackledge, ed., Forensic Analysis On the Cutting Edge , John Wiley & Sons, Inc., 2007, pp. 291-331.

6.9.5.4.11 "Identification and Comparison of Electrical Tapes Using Instrumental and Statistical Techniques: I. Microscopic Surface Texture and Elemental Composition", Goodpaster, J.V., Sturdevant, A.B., Andrews, K.L, and Brun-Conti, L., *Journal of Forensic Sciences*, Vol. 52(3), 2007, pp. 610-629.

6.9.5.4.12 "The Examination of Pressure Sensitive Adhesive Tapes", Johnston J. and Serra J., (International Association for Microanalysis) *IAMA Newsletter*, Vol. 5(1), 2005, pp. 19-31.

6.9.5.4.13 "PLM Examinations of Clear Polymer Films: Identification of monoaxial and biaxial orientation and other observations", Smith, J.M. and Weaver, R., *Microscope*, Vol. 52(3/4), 2004, pp. 112-118.

6.9.5.4.14 "A New Approach for the Analysis of Duct Tape Backings", Hobbs, A.L., Gauntt, J., Keagy, R., Lowe, P.C., Ward, D., *Forensic Science Communication*s, Vol. 9(1), 2007.

6.9.5.5 Documentation

6.9.5.5.1 As a minimum, each case file will include individual case notes, all worksheets and hard copies of all spectra generated during the analysis and conditions sheets for instrumental analyses conducted, as applicable.

6.9.5.6 Report Wording

6.9.5.6.1 Methods: Techniques utilized in the analysis shall be listed on the report.

Items 1 and 2 were examined visually. Items 1 and 2 were further examined using stereomicroscopy, polarized light, a digital caliper, polarized light microscopy (PLM), comparison microscopy, fluorescence microscopy, microchemical tests, Fourier Transform Infrared Spectrophotometry (FTIR), Scanning Electron Microscopy-Energy Dispersive X-Ray Spectrometry (SEM-EDS), and X-Ray Diffractometry (XRD).

6.9.5.6.2 The results of the comparison, an appropriate conclusion statement, and level of association shall be reported with a "Terminology Key for Comparative Examinations" on the Certificate of Analysis.

COPYRIGHT © 2023 VIRGINIA DEPARTMENT OF FORENSIC SCIENCE

UNCONTROLLED COPY

6.9.5.6.3 If the compared samples are found to PHYSICALLY FIT:

Examination and comparison of Items 1 and 2 revealed corresponding edges and features. These Items physically fit to form one continuous piece when corresponding edges and/or features are re-aligned in a specific sequence. It is therefore concluded that Items 1 and 2 were, at one time, a portion of a single unit (**Level I - Physical/Fracture Match**).

6.9.5.6.4 If the compared samples are CONSISTENT/SIMILAR:

6.9.5.6.4.1 For associations, additional explanation to justify the chosen level of association shall also be included.

6.9.5.6.4.2 The use of the term "consistent" must be accompanied by what the tapes were "consistent" in (e.g., overall construction, physical properties, chemical properties). This term is generally used when there are no unexplainable differences in the testing conducted on the known and questioned samples.

COPYRIGHT © 2023 VIRGINIA DEPARTMENT OF FORENSIC SCIENCE

6.9.5.6.4.3 It is recognized that there may be instances when, based on the data, the term "similar" may be more appropriately substituted for "consistent". The reason for the use of the term "similar" in lieu of "consistent" must be explained in the report. There may be an occasion when these terms are used in the same sentence.

6.9.5.6.4.4 Examples:

- The Item ___ duct tape could not be physically fitted to the Item ___ roll of tape (known). The Item ___ duct tape was consistent with the Item ___ (known) in overall construction and in physical and chemical properties. Further, both items have similar environmental damage on their surfaces. It was concluded that the Item ___ duct tape originated from either Item ___ or another source of tape with the same overall construction, physical and chemical properties (**Level II – Association with Highly Discriminating Characteristics**). This type of conclusion was reached because other rolls of tape produced at the same manufacturing plant and produced with the same properties would also be indistinguishable, but these rolls would not be expected to be damaged.

- The black electrical tape present on Item ___ was consistent with the Item ___ tape (known) in overall construction and in physical and chemical properties. It was concluded that the Item ___ tape originated from either Item ___ (known) or from a roll manufactured in the same manner (**Level III – Association with Discriminating Characteristics**). This type of conclusion was reached because other rolls of tape produced at the same manufacturing plant and produced with the same properties would also be indistinguishable. Due to differences between tape products, the techniques used in this comparative analysis can typically distinguish different tapes.

- The Item _____ adhesive recovered from the mouth area of the victim was consistent in physical and chemical properties with the adhesive in Item _____ (known). It was concluded that the

UNCONTROLLED COPY

Item _____ recovered adhesive originated from either Item _____ (known) or another adhesive with the same physical and chemical properties (**Level IV – Association with Limitations**). This type of conclusion was reached because of the limited number of distinguishing characteristics available for comparison between the Item 1 and 2 adhesives.

6.9.5.6.5 If the compared samples are INCONCLUSIVE:

Item 2 (questioned) and the adhesive from the Item 3 tape possess similar characteristics but also exhibit some differences. It cannot be determined whether these differences were due to the condition of the Item 2 adhesive or because the Item 2 adhesive is from a different source other than Item 3. Therefore, based on the samples examined, no meaningful conclusion could be reached (**Inconclusive**).

6.9.5.6.6 If the compared samples are DIFFERENT, the reason for elimination (differences in color, physical properties, optical properties, chemical properties, and/or fluorescence) shall be included in the conclusion:

Item ___ could not be associated with Item ___ due to differences in _____ (e.g., color, physical properties, manufacturing characteristics of the tape backing, chemical properties) (**Exclusion/Elimination**).

6.9.5.6.7 While generally not applicable, there may be an instance where an "Exclusion with Limitations" conclusion is drawn. In such instances, explanation and justification of such a conclusion is necessary.

6.9.5.6.8 Generally, in instances where two or more associations are being reported, each association and appropriate level should be reported separately. An additional "Combined Conclusion" may be included which considers the overall significance of transferred materials, however, this will not include an assigned level. See Section 20.

6.9.5.6.9 If foreign fibers were recovered and knowns are being requested for comparison purposes see Section 3.

COPYRIGHT © 2023 VIRGINIA DEPARTMENT OF FORENSIC SCIENCE

6.10 Tear Gas and Pepper Sprays

6.10.1 Purpose

To identify tear gas products that may be encountered in casework: 2-chloroacetophenone (CN), o-chlorobenzylidenemalononitrile (CS) and oleoresin capsicum (OC), which contains the active component, capsaicin.

6.10.2 Safety Considerations

6.10.2.1 Tear gas products are irritants, by definition, and will cause physical discomfort if inhaled. If working with spray products or highly concentrated clothing items, perform analysis in a fume hood.

6.10.2.2 Avoid contact with skin and eyes.

6.10.3 Minimum Standards and Controls

6.10.3.1 Treat the questioned samples and any submitted control/standard samples in the same manner.

UNCONTROLLED COPY

6.10.3.2 When performing extractions also analyze a blank of the extraction liquid and an unstained portion of the substrate, if possible. If an unstained portion of the substrate is not possible, analyze the extraction solvent as the negative control.

6.10.3.3 When identifying a tear gas component, retention time data for samples and standards are needed from at least the polar or semi-polar GC or GC-MS column, along with the retention time and spectral data from the GC-MS.

6.10.4 Analytical Procedures

6.10.4.1 Extraction of liquids (spray products)

6.10.4.1.1 Weigh the canister to obtain the gross weight as received.

6.10.4.1.2 CS and CN

COPYRIGHT © 2023

- Oil based - Spray approximately 1 ml of the liquid into a vial and add about 1 ml of methanol. Analyze by GC and GC-MS. Concentrate by evaporation or dilute with methanol as needed.
- Alcohol based - Spray approximately 5 ml, if available, into a small beaker and gently evaporate to several drops. The residue is analyzed by GC and GC-MS.

VIRGINIA DEPARTMENT OF FORENSIC SCIENCE

6.10.4.1.3 Capsaicin

- Spray approximately 1 ml of the liquid into a vial and add about 1 ml of methanol. Analyze by GC and GC-MS. Concentrate by evaporation or dilute with methanol as needed.

6.10.4.2 Extraction of clothing items

6.10.4.2.1 View the evidence item(s) under ultraviolet light or by using an alternative light source. Note any fluorescing areas, document as appropriate. If a known source canister is submitted also check the known liquid for fluorescence using ultraviolet light or an alternative light source.

6.10.4.2.1.1 Fluorescence QC procedure:

- Perform fluorescence QC check prior to using UV source for casework using a suitable fluorescent highlighter. Place a mark on a glass slide using the highlighter to verify proper operation of the UV source and record resulting fluorescence in notes. The prepared slide can be stored out of direct light and can be used for future QC checks. If the QC check fails, troubleshoot equipment and repeat QC check. If the UV source fails to produce fluorescence on the prepared slide(s), take the UV source out of operation until suitable repairs are made.

6.10.4.2.2 If a stained area is visible on the clothing, or becomes viewable by the process described above, remove a portion of it by cutting with scissors or a new scalpel. Remove an equivalent sized portion of an unstained area for use as a control, if necessary.

6.10.4.2.3 If no stains are visible, remove portions of the garment from an area of the clothing where spray was reported to have been administered. Remove an equal

UNCONTROLLED COPY

sized portion of the clothing from an area of the garment farthest from the sampled area for use as a control, if necessary.

6.10.4.2.4 Extract the cuttings with methanol, using the smallest volume to facilitate complete wetting of the cuttings and subsequent recovery of the methanol. Analyze by GC and GC-MS. Concentrate sample or dilute with methanol as needed.

6.10.5 Report Wording

6.10.5.1 CS and CN:

6.10.5.1.1 The Item _____ canister (was operational and) contained _____. _____, commonly known as _____, is an irritant.

6.10.5.1.2 _____, commonly known as _____, was identified in the Item_____ extract.

COPYRIGHT © 2023

6.10.5.1.3 Report CS as o-chlorobenzylidenemalononitrile (CS).

6.10.5.1.4 Report CN as 2-chloroacetophenone (CN).

6.10.5.2 OC:

VIRGINIA DEPARTMENT OF FORENSIC SCIENCE

6.10.5.2.1 Item _____ contained _____. This is consistent with the labeling on the capsicum-based pepper spray container.

6.10.5.2.2 Capsaicin (and dihydrocapsaicin) was (were) identified in the Item _____ extract. This (These) is a(are) component(s) of capsicum-based pepper sprays.

6.10.5.3 If no CS, CN or OC are identified:

No _____ were identified in the Item ____ extract.

6.10.5.4 Techniques used in the analysis shall be identified in the body of the report. See ¶ 20.4 for example wording.

6.10.6 References

6.10.6.1 Nowicki, J. "Analysis of Chemical Protection Sprays by GC/MS"; *Journal of Forensic Sciences*, 1982, 27, 3, 704-709.

6.10.6.2 Fung, T.; Jeffrey, W.; Beveridge, A.D. "The Identification of Capsaicinoids in Tear Gas Sprays"; *Journal of Forensic Sciences*, 1982, 27, 4, 812-821.

6.10.6.3 Martz. "A Comparison of Ionization Techniques for Gas Chromatography/Mass Spectroscopy Analysis of Dye and Lachrymator Residues from Exploding Bank Security Devices"; *Journal of Forensic Sciences*, 1983, 28, 200.

6.10.6.4 Ferslew. "Spectral Differentiation and Gas Chromatographic/Mass Spectrometric Analysis of the Lachrimators 2-chloroacetophenone and O-Chlorobenzylidene Malononitrile"; *Journal of Forensic Sciences*, 1986, 31, 658.

6.10.6.5 Mongan, A.L.; Buel, E. "Identification of Dog Repellent in the Clothes of an Assault Suspect Using Gas Chromatography/Mass Spectrometry"; *Journal of Forensic Sciences*, 1995, 40, 3, 513-514.

UNCONTROLLED COPY

6.10.6.6 Gag, J.A.; Merck, N.F. "Concise Identifications of Commonly Encountered Tear Gases"; *Journal of Forensic Sciences*, 1977, 22, 22, 358-364.

6.10.6.7 Illinois State Police, Trace Chemistry Procedures Manual, February 1997.

6.11 Fatty Acid Based Products

6.11.1 Purpose

To extract, derivatize, and analyze vegetable oils encountered as neat liquids and in fire debris samples. Triglycerides and free fatty acids in vegetable oils are not suitable for extraction by passive adsorption-elution or separation and analysis by GC or GC-MS due to their low volatility. Solvent extraction and derivatization of fatty acids to Fatty Acid Methyl Esters (FAMEs) are necessary for analysis. It should be noted that this technique will also work for animal fats as these are similar in composition to vegetable oils.

FAMEs are also present in biodiesel. Derivatization is not necessary to identify the FAMEs in biodiesel.

COPYRIGHT © 2023

If ignitable liquid analysis is required, it shall be performed prior to analysis for vegetable oils as this test method is a destructive technique.

6.11.2 Safety Considerations

VIRGINIA DEPARTMENT OF FORENSIC SCIENCE

6.11.2.1 Pentane (C5) should be kept from heat, heat sources, and sources of ignition.

6.11.2.2 Perform extractions in a fume hood.

6.11.3 Minimum Standards and Controls

6.11.3.1 A standard mixture consisting of at least the following FAMEs shall be used: C16:0, C18:0, C18:1, C18:2, and C18:3.

6.11.3.2 Reference vegetable oils may be used for comparison, if appropriate.

6.11.3.3 Reagents shall be prepared in accordance with the QA/QC protocol (See Section 21.3).

6.11.3.4 In the case of liquid samples, a solvent blank should be analyzed. The solvent blank should be treated like the sample and as such, should undergo the derivatization process and serve as a negative control.

6.11.3.5 In the case of debris samples, an extraction blank must be generated at the same time as the debris extraction. Approximately the same volume of pentane decanted off for the extraction should be used for the extraction blank and this extraction blank should be evaporated to at least the same approximate volume as the most evaporated sample. The extraction blank should be processed with the derivatization reagent and serve as a negative control.

6.11.3.6 A reference vegetable oil diluted in pentane and derivatized should serve as a positive control to verify the performance of the derivatization reagent. If FAMEs are not observed in the reference vegetable oil, a new derivatization reagent will be prepared and all case samples will be reanalyzed once the reagent's performance is verified.

6.11.4 Analytical Procedures

6.11.4.1 Liquid Samples

6.11.4.1.1 Dilute the liquid sample by adding 1 drop of the liquid to approximately 10 mL of pentane.

UNCONTROLLED COPY

6.11.4.1.2 Add approximately 0.5 mL of 2N KOH in methanol to the diluted liquid and mix.

6.11.4.1.3 Allow the layers to separate and remove the top (organic) layer to a new, clean vial.

6.11.4.1.4 Analyze using GC-MS.

6.11.4.2 Debris Samples

6.11.4.2.1 Perform a solvent extraction, as described in Section 4.4.

6.11.4.2.2 Add approximately 0.5 mL of 2N KOH in methanol to approximately 2 mL of the extract and mix.

6.11.4.2.3 Allow the layers to separate and remove the top (organic) layer to a new, clean vial.

COPYRIGHT © 2023

6.11.4.2.4 Analyze using GC-MS.

6.11.4.3 When identifying fatty acids, retention time and mass spectral data for the sample and the FAME standard mixture are needed from the GC-MS.

VIRGINIA DEPARTMENT OF FORENSIC SCIENCE

6.11.4.3.1 At a minimum, retention times and mass spectra should be compared to primary standards. In addition, a minimum of one (1) product from the reference collection should be included as an example of a commercially available product containing fatty acids. The reference vegetable oil used to verify the performance of the derivatizing reagent can be used for this purpose, if appropriate.

6.11.4.3.2 It should be noted that the mere presence of fatty acids in fire debris does not confirm the presence of vegetable oils or animal fats.

6.11.4.3.3 Extracted ion profiles using the following ions may be used: 67, 74, 79, or the molecular weight of the FAME of interest.

6.11.4.4 Biodiesel products may contain a mixture of a petroleum distillate and FAMEs. Derivatization is not necessary to identify FAMEs. FAMEs can be identified in debris using headspace extraction techniques and GC-MS. Solvent extraction may be required to further identify and characterize the petroleum product or the FAME content.

6.11.4.4.1 The presence of FAMEs and a petroleum distillate is a strong indication of a biodiesel product, as FAMEs are not naturally occurring.

6.11.5 Report Wording

6.11.5.1 Methods: Techniques utilized in the analysis shall be listed on the report.

6.11.5.1.1 The Item ___ liquid was examined using a miscibility test. The Item ___ liquid was derivatized and examined using Gas-Chromatography-Mass Spectrometry (GC-MS).

6.11.5.1.2 Item ___ was extracted using a solvent technique. The Item ___ extract was derivatized and examined using Gas-Chromatography-Mass Spectrometry (GC-MS).

UNCONTROLLED COPY

6.11.5.1.3 Items ___ and ___ were extracted using passive adsorption-elution and solvent techniques. The Item ___ and ___ passive adsorption-elution extracts were examined using Gas Chromatography-Mass Spectrometry (GC-MS). The Item ___ and ___ solvent extracts were derivatized and examined using GC-MS.

6.11.5.2 To the maximum extent possible, report wording will be selected from the following:

6.11.5.2.1 The Item ___ liquid/extract contained fatty acids. Fatty acids are naturally occurring and are found in vegetable oils and animal fats.

6.11.5.2.2 The Item ___ liquid/extract contained fatty acids, which can be found in, but are not limited to, vegetable oils and animal fats.

6.11.5.2.3 No ignitable liquids were identified in the Item ___ passive adsorption-elution extract. The Item ___ solvent extract contained fatty acids, which can be found in, but are not limited to, vegetable oils and animal fats.

COPYRIGHT © 2023

6.11.5.2.4 No fatty acids were identified in the Item ___ extract. Fatty acids are found in vegetable oils and animal fats.

6.11.5.2.5 The Item ___ extract(s) contained a mixture of a heavy petroleum distillate and fatty acid methyl esters (FAMEs). This mixture is indicative of a biodiesel product.

VIRGINIA DEPARTMENT OF FORENSIC SCIENCE

6.11.5.2.6 Fatty acids are naturally occurring in wood. If wood is present in an item, the examiner may identify the fatty acids and report as follows:

The Item ___ extract contained fatty acids, which can be found in, but are not limited to, vegetable oils, animal fats, and wood.

6.11.5.2.7 Some wood stains, treatments, and sealants contain a mixture of fatty acids and other ignitable liquids, including petroleum distillates, naphthenic-paraffinic products, and aromatic products. Should a petroleum product be identified in the charcoal strip extract when fatty acids are identified in the solvent extract, the combined results may be reported as follows if a product from the reference collection with a similar mixture is included in the case file:

The Item ___ extracts contained a mixture of a medium petroleum distillate and fatty acids. The medium petroleum distillate can be found in, but is not limited to, some mineral spirits, paint thinners, and charcoal starter fluids. Fatty acids can be found in, but are not limited to, vegetable oils and animal fats. This mixture is classified as a medium to heavy miscellaneous product, which can be found in, but is not limited to, some wood treatment products.

6.11.6 References

6.11.6.1 ASTM E2881-18, Standard Test Method for Extraction and Derivatization of Vegetable Oil and Fats from Fire Debris and Liquid Samples with Analysis by Gas Chromatography-Mass Spectrometry.

6.11.6.2 ASTM E2997-16, Standard Test Method for Analysis of Biodiesel Products by Gas Chromatography-Mass Spectrometry.

6.11.6.3 Gambrel, A.K., Reardon, M.R., “Extraction, Derivatization, and Analysis of Vegetable Oils from Fire Debris,” Journal of Forensic Sciences, Vol. 53, No. 6, Nov. 2008, pp. 1372-1380.

UNCONTROLLED COPY

6.11.6.4 Kuk, R.J., Spagnola, M.V., "Extraction of Alternative Fuels from Fire Debris Samples," Journal of Forensic Sciences, Vol. 53, No. 5, Sept. 2008, pp. 1123-1129.

6.11.6.5 Schwenk, L.M., Reardon, M.R., "Practical Aspects of Analyzing Vegetable Oils in Fire Debris," Journal of Forensic Sciences, Vol. 54, No. 4, July 2009, pp. 874-880.

COPYRIGHT © 2023

VIRGINIA
DEPARTMENT
OF
FORENSIC SCIENCE

UNCONTROLLED
COPY

7 GLASS

7.1 Analytical Approach

7.1.1 Forensic glass examinations usually involve the comparison of a questioned glass sample with a known sample from a broken glass source. The glass samples are analyzed by determining physical properties and refractive index for the known and questioned glass samples. Glass that is macroscopic will be referred to as glass fragments, and glass that is microscopic will be referred to as glass particles. Particle size sometimes precludes the determination of some or all of a glass particle's physical properties. In this situation, physical properties are determined to the extent possible, and conclusions are drawn based on those properties that can be determined.

7.1.2 Glass comparison examinations should be considered for fracture match examination, if feasible. Fracture match (or physical fit) provides the only conclusive association between glass samples.

7.1.3 Another examination that may be requested is glass identification. A request may be that a submitted sample be identified as glass, or it may be to identify the type of glass in a sample. Physical properties and/or refractive index measurements are determined to the extent necessary to reach a conclusion.

COPYRIGHT © 2023

7.1.4 Direction-of-impact or sequence-of-impact determinations may be requested for a submitted glass sample. These determinations can only be made from non-tempered glass sources.

VIRGINIA DEPARTMENT OF FORENSIC SCIENCE

7.1.4.1 For direction-of-impact, the broken pane is reconstructed and, if possible, the point-of-impact and cracks radiating from that point are identified to determine the direction-of-impact.

7.1.4.2 For sequence-of-impact, the glass pane must hold together in order to retain the pattern. Typically, only laminated or wire reinforced panes will retain a pattern suitable for examination. The investigator must collect and preserve as much of the window pane as possible for this determination.

7.1.5 Glass sources sometimes have other materials such as paint, decals, or tint films associated with them. These materials may be transferred with glass particles and may increase the evidentiary value of the glass. Comparisons of glass samples such as this should also include comparison of these associated materials. These examinations will be performed in accordance with the applicable Section protocols.

7.2 Recovery of Glass Particles from Clothing and Objects

7.2.1 Purpose

This procedure is necessary to isolate glass particles for characterization and subsequent comparison with known glass samples.

7.2.2 Minimum Standards and Controls

7.2.2.1 All glassware is cleaned prior to use.

7.2.2.2 Processing table/area must be cleaned before and after each use.

7.2.2.3 Minute glass particles recovered from debris must be clean in order to perform testing procedures.

7.2.2.4 Known glass samples are isolated from items being processed to prevent contamination.

7.2.3 Analytical Procedures

7.2.3.1 Describe the evidence and note the condition (e.g., new, worn, clean, soiled, apparent blood stains, damage presence and location, scratches, gouges). Document the locations of any

UNCONTROLLED COPY

probative tears, glass particle deposits, or other unusual features. Photographs may be included for support and/or to document the condition. Personal items from pockets should be noted and retained with the originating item.

7.2.3.2 Using a spatula, scrape clothing item(s) over paper. Scrape inside pockets and cuffs, if present. Clothing items from a single individual, with the exception of shoes, may be processed together to yield combined debris from a set of items. Shoes must be processed separate from other clothing, due to the possibility that extraneous glass from the environment may be present. If right and left shoes from a single individual are submitted as separate items, these may be processed together to yield combined debris from the items. It may be necessary to use a small spatula or probe to remove debris from the soles of shoes.

If clothing and shoes are submitted from a particular suspect, the clothing items are considered to be the best evidence for glass examination. If glass particles are recovered from the clothing items and subsequently associated with the known glass source, the shoes may not be necessary for examination. This is determined on a case-by-case basis.

COPYRIGHT © 2023

Rigid objects such as tools and weapons are processed by the most appropriate means, depending on the item. Brushing an item over paper using new, clean, disposable paint brushes usually yields the best results. If particles are embedded in an object, probing in gouges may be the most effective means of removal.

VIRGINIA DEPARTMENT OF FORENSIC SCIENCE

7.2.3.3 Collect debris and retain in a labeled container (plastic container, evidence fold, etc.). If apparent glass particles are seen visually they may be retained in a separate container.

7.2.3.4 Thoroughly examine the recovered debris for glass particles using a stereomicroscope (usually 30X-40X magnification). Describe the overall make-up of the debris. Remove apparent glass particles based on clarity, irregular shape, hardness, freshness of edges, and conchoidal fracture. Place the recovered particles in a labeled depression slide. Recover at least ten (10) particles, if that many can be found. If two or more distinguishable glass sources were broken in the incident and submitted for analysis, the examiner shall attempt to recover additional particles from the collected debris, if possible. The general rule is ten particles per separate known glass sample.

7.2.3.5 In a dry mount in the depression slide, examine the recovered particles using a polarized light microscope or stereomicroscope with transmitted illumination and a polarizing attachment. Anisotropic particles, those which exhibit birefringence using crossed polars, are eliminated as glass particles. Particles that exhibit no interference colors using crossed polars are isotropic particles. Isotropic particles having the physical properties indicated above are therefore identified as glass. If the recovered particles are isotropic, indicate in the case notes that the particles were examined using crossed polars and were isotropic.

7.2.3.6 Glass fragments and/or particles are cleaned prior to further analysis, as necessary. When glass fragment and/or particles are cleaned, it shall be reflected in the case notes. Select one of the two following methods for cleaning:

7.2.3.6.1 Glass particles are transferred to a small labeled beaker (such as the 50 ml size) and 10-20 ml of 5% micro detergent solution is added. The beaker is placed in an ultrasonic cleaner and set to clean for 10 minutes. The particles are washed into a coned filter paper in a funnel with deionized water and rinsed well. The clean glass particles are recovered from the filter paper for comparison to known samples.

7.2.3.6.2 Glass particles are washed directly in the depression slide in a 5% micro detergent solution in an ultrasonic cleaner. The depression slide is placed in a 100mm diameter Pyrex Petri dish. A small amount of deionized water is placed in the Petri dish and in the bottom of the ultrasonic cleaner which is set to clean for 5 minutes. The particles are then transferred to the second depression well on

UNCONTROLLED COPY

the slide and rinsed in deionized water by 5 minute sonication. The clean glass particles are recovered from the depression slide for comparison to known samples.

7.2.4 References

7.2.4.1 Koons, Robert D., Buscaglia, JoAnn, Bottrell, Maureen, Miller, E.T. "Forensic Glass Comparisons", in Forensic Science Handbook, Volume 1, Second Edition; R. Saferstein, ed, Pearson Education, Inc.: Upper Saddle River, NJ, 2002, p. 179.

7.2.4.2 Nelson, D.F. "The Examination of Glass Fragments" in Methods of Forensic Science; A.S. Curry, ed, Interscience Publishers: London, 1965.

7.2.4.3 Harrison, P.H.; Lambert, J.A.; Zoro, J.A."A Survey of Glass Fragments Recovered from Clothing of Persons Suspected of Involvement in Crime"; Forensic Science International, 1985, 27, pp. 171-187.

7.2.4.4 Brewster, F.; Thorpe, J.; Gettinby, G.; Caddy, B.; "The Retention of Glass Particles on Woven Fabrics"; Journal of Forensic Sciences, 1985, 30, 3, pp. 798-805.

7.2.4.5 McQuillan, J.; Edgar, K. "A Survey of the Distribution of Glass on Clothing"; Journal of Forensic Science Society, 1992, 32, 4, pp.333-348.

7.2.4.6 Collection, Handling, and Identification of Glass, Scientific Working Group for Materials Analysis, *Forensic Science Communications,* Volume 7, No. 1, January 2005.

7.2.4.7 Hamer, Pamela, "Microscopic techniques for glass examination", in Forensic Examination of Glass and Paint, Analysis and Interpretation; Brian Caddy, ed, Taylor and Francis: London and New York, 2001, Ch. 3, Sec 3.1 – 3.5, pp 47-55.

7.2.4.8 Thornton, John I., "Interpretation of physical aspects of glass evidence", in Forensic Examination of Glass and Paint, Analysis and Interpretation; Brian Caddy, ed, Taylor and Francis: London and New York, 2001, Ch. 6, Sec. 6.7, p. 114 and Sec. 6.9 pp 116-118.

COPYRIGHT © 2023 VIRGINIA DEPARTMENT OF FORENSIC SCIENCE

7.3 Physical Properties

7.3.1 Purpose

This procedure is used to characterize the physical properties of a glass sample or an individual glass fragment for comparison of these properties with other samples or fragments.

7.3.2 Safety Considerations

7.3.2.1 When using the UV lamp, safety glasses that provide UV protection should be worn.

7.3.2.2 Extreme care should be taken to prevent lacerations from glass samples, especially when working with laminated glass samples.

7.3.3 Minimum Standards and Controls

7.3.3.1 Work area must be cleaned before and after each use.

7.3.4 Analytical Procedures

7.3.4.1 Glass comparison examinations should be considered for a fracture match examination, when appropriate.

UNCONTROLLED COPY

7.3.4.1.1 Fracture match (or physical fit) provides the only conclusive association between glass samples.

7.3.4.2 Prepare a glass worksheet and record visual observations. These observations include, but are not limited to, color, type (float vs. non-float, flat vs. container, curved vs. flat), thickness, temper, shape, inclusions, surface texture and surface markings. Record the amount of glass received. As applicable, this may be accomplished by indicating either the number of fragments/particles/dices of an approximate size (1 fragment ~1 ¼" x 3", 6 fragments ~ 1/2") or by indicating a general description as to amount present (e.g., ~ 1 tablespoon of glass fragments, ~ ¼ cup of glass fragments). Examine a sufficient number of fragments in the sample to determine if multiple broken glass sources may be present in the sample.

7.3.4.2.1 Laminated glass, if submitted in its complete form, should be sampled from both layers and treated as two separate samples.

7.3.4.3 If two parallel manufactured surfaces are present, measure the thickness of the glass sample using a digital caliper. Take a representative number of measurements to determine if a thickness range exists. The measurements, to include maximum and minimum measurements, shall be recorded on the worksheet to the one hundredth of a millimeter. The digital caliper used will be noted on the glass worksheet.

7.3.4.3.1 Float glass samples with thicknesses that differ by greater than 0.15 mm may be eliminated as having originated from the same source. The questioned glass sample is not eliminated if it is within the observed thickness range of the known sample.

7.3.4.4 Observe the fractured surfaces of a glass sample for indications of temper. Tempered glass sources typically "dice" when broken, forming approximate cube shaped fragments. The broken surfaces of these fragments are generally perpendicular to the manufactured surfaces. Other characteristics of tempered glass may include symmetrical, or mirror-imaged, ridges on the broken surfaces, or the presence of a "frost line", which generally divides the symmetrical ridges in the broken surfaces. For samples of limited size, examination of the fragments with a polarized light microscope (PLM) using crossed polarized light may be useful to determine temper. Tempered glass exhibits internal stresses that can be observed as interference colors that appear to move through the fragment as the PLM stage is rotated. Based on the presence or absence of these observations, record the sample as "tempered" or "non-tempered" on the glass worksheet.

7.3.4.5 Before examining the fluorescence properties of the known glass, perform the handheld UV light source QC check. In a darkened room, examine flat manufactured surfaces using short and long wavelength UV. If a flat glass sample exhibits a marked fluorescence on one side and not on the other while being examined using short wavelength UV, it is determined to be a float glass. Glass samples may also exhibit an overall fluorescence rather than only on the float surfaces. Record fluorescence observations on the worksheet for both long and short wavelengths, including whether the glass sample is float or non-float.

7.3.4.6 If the glass sample has a highly reflective but transparent manufactured surface, determine if the glass is from a low emissivity (low-E) source. On the multimeter, select the ohm setting for resistance. Check the multimeter prior to use by touching the probes together to ensure continuity. Record this check on the glass worksheet. Then press the two probes of the multimeter against the glass surface without allowing them to touch each other. If the surface conducts electrical current, the sample is a low-E glass. Low-E glass conducts electrical current on one manufactured surface but not the other. The multimeter used shall be noted on the glass worksheet.

COPYRIGHT © 2023 VIRGINIA DEPARTMENT OF FORENSIC SCIENCE

UNCONTROLLED COPY

7.3.4.7 If the questioned and known glass samples being compared cannot be distinguished by the physical properties discussed above, the refractive indices of the samples are compared (See Section 7.4).

7.3.5 References

7.3.5.1 Koons, Robert D., Buscaglia, JoAnn, Bottrell, Maureen, Miller, E.T. "Forensic Glass Comparisons", in Forensic Science Handbook, Volume 1, Second Edition; R. Saferstein, ed, Pearson Education, Inc.: Upper Saddle River, NJ, 2002, pp. 179-186.

7.3.5.2 Nelson, D.F. "The Examination of Glass Fragments" in Methods of Forensic Science; A.S. Curry, ed, Interscience Publishers:London, 1965.

7.3.5.3 Collection, Handling, and Identification of Glass, Scientific Working Group for Materials Analysis, *Forensic Science Communications,* Volume 7, No. 1, January 2005.

7.3.5.4 Initial Examinations of Glass, Scientific Working Group for Materials Analysis, *Forensic Science Communications,* Volume 7, No. 1, January 2005.

7.3.5.5 Dorn, H., Ruddell, D., Heydon, A., Stefanescu, A., Stryjnik, A., Burton, B. D., "Unusual Variation of Thickness Within a Pane of Annealed Float Glass", *Can. Soc. Forensic Sci. J.* Vol. 46, No. 3 (2013), pp. 166-69.

COPYRIGHT © 2023 VIRGINIA DEPARTMENT OF FORENSIC SCIENCE

7.4 Refractive Index (RI) Measurement by GRIM3 System

7.4.1 Purpose

This procedure is used to determine the refractive index of a glass sample or individual glass fragments/particles for comparison with other samples or fragments/particles.

7.4.2 Minimum Standards and Controls

7.4.2.1 Tools for crushing glass and the work area must be cleaned before and after each use.

7.4.2.2 Annual calibration, a monthly QA check, a day-of-use QA check and a case QA check are required.

7.4.2.3 Questioned glass particles recovered from debris from clothing or objects shall be cleaned prior to mount preparation to obtain the most suitable data.

7.4.3 Analytical Procedures

7.4.3.1 Start the GRIM3 system and allow it to stabilize for one hour prior to taking measurements.

7.4.3.1.1 Open the GRIM3 software and create a data file for the FS case. Select the oil and wavelength being used for the measurement.

7.4.3.1.2 The prepared mount is inserted into the hot stage on the phase contrast microscope. The bulk of the particles are located and the microscope is focused on the glass particles.

7.4.3.1.3 Using the phase telescope in place of one of the microscope oculars, phase contrast is adjusted by viewing and aligning the phase rings. This is accomplished by pushing in and turning the adjustment knobs for the phase annulus, which is located on the microscope's condenser assembly. The phase contrast should be checked and adjusted for each prepared mount.

UNCONTROLLED COPY

7.4.3.1.4 Prepare a mount of fine, crushed glass particles using the appropriate immersion oil. Locke Silicone Oil B is used for most window and container glasses. Locke Silicone Oil C is used with headlight glasses. Locke Silicone Oil A is used for samples with high refractive index that are above the refractive index range of the Locke Silicone Oil B. A cover slip is placed over the oil. The slide is marked for identification purposes.

7.4.3.2 Using the appropriate oil, mounts are prepared of questioned and known macroscopic glass fragments or microscopic recovered glass particles for refractive index determination. .

7.4.3.2.1 For fragments:

7.4.3.2.1.1 Prepare crushed mountings for fragments or, for preservation purposes, a portion of a fragment.

7.4.3.2.1.2 When five or more glass fragments are present in a sample, prepare crushed mountings from at least five fragments. Select particles to measure which exhibit edges with a high degree of contrast.

COPYRIGHT © 2023

7.4.3.2.1.2.1 The degree of contrast on the GRIM3 system can be assessed by the “Edge Contrast” value assigned to each measured value. This value is shown in parentheses next to the match temperature measurement. The best value is “99", with the value decreasing as edge contrast quality decreases.

VIRGINIA DEPARTMENT OF FORENSIC SCIENCE

7.4.3.2.1.2.2 Obtain RI measurements on a minimum of two particles for each crushed mounting for a total of ten measurements per known sample.

7.4.3.2.1.2.3 For samples that exhibit a wide within-sample variation such as tempered glass or other non-annealed glass sources, obtain RI measurements on a minimum of four particles for each crushed mounting for a total of 20 measurements per known sample.

7.4.3.2.1.3 When four or fewer glass fragments are present in a sample, prepare crushed mountings from each of the fragments. Obtain RI measurements for a total of 10 or 20 particles as noted in ¶¶ 7.4.3.2.1.1.2 and 7.4.3.2.1.1.3 Sample size and examiner discretion will determine how many areas of a fragment will be sampled. Multiple samplings from a single large glass fragment may be necessary.

7.4.3.2.1.4 Questioned glass fragments:

7.4.3.2.1.4.1 A single questioned glass fragment association requires a minimum of four measurements.

7.4.3.2.1.4.2 In the case of a questioned glass sample where the sample is assumed to be homogeneous and the difference in mean refractive index with the known glass is greater than ± 0.0003, only four measurements are necessary.

UNCONTROLLED COPY

7.4.3.2.2 For particles:

7.4.3.2.2.1 Glass particles with an edge contrast value of less than “10", in either the cooling or heating measurement cycles, will not be considered as suitable for comparison purposes. Such glass particles must be rejected and will not be associated with a comparison sample regardless of the measured value. The particle may be re-measured on a different edge to obtain an acceptable edge contrast value.

7.4.3.2.2.2 Multiple individual questioned particles may be mounted together on a single slide. If this is done, rough sketching of the mount is necessary for reference while collecting data and shall be retained with the case file documentation.

7.4.3.2.2.3 When a single questioned particle is too large to mount without crushing but is too small for determination of physical properties, only one RI measurement is necessary.

COPYRIGHT © 2023

7.4.3.2.3 The case file notes will clearly document how the glass was sampled.

VIRGINIA DEPARTMENT OF FORENSIC SCIENCE

7.4.3.3 The refractive index measurement for questioned glass fragments/particles will be compared to the observed refractive index range for the known glass sample(s).

7.4.3.3.1 Questioned glass particles with refractive index values that are within the observed RI range of the known glass sample(s) are considered to be consistent in refractive index.

7.4.3.3.2 Questioned glass fragments with an observed RI range that overlaps with the observed RI range of the known glass sample(s) are considered to be consistent in refractive index.

7.4.3.4 Following the examination, individual questioned glass particles are recovered and retained with the evidence.

7.4.3.4.1 The case file notes will record how the evidence is packaged for return.

7.4.4 References

7.4.4.1 GRIM3 "User Manual 08", September 2006.

7.4.4.2 Locke Scientific "Reference Glasses and Silicone Oils for Refractive Index Determination".

7.4.4.3 Locke, J.; Underhill, M. "Automatic Refractive Index Measurement of Glass Particles"; Forensic Science International, 1985, 27, pp. 247-260.

7.4.4.4 Satterthwaite, M.J.; Harrison, P.H.; Lambert, J.A.; "Glass Refractive Index - Recent Developments in Measurement and Data Handling in UK Forensic Science Service Laboratories", Forensic Science Service, Wetherby Laboratory, West Yorkshire, England.

7.4.4.5 Koons, Robert D., Buscaglia, JoAnn, Bottrell, Maureen, Miller, E.T. "Forensic Glass Comparisons", in Forensic Science Handbook, Volume 1, Second Edition; R. Saferstein, ed, Pearson Education, Inc.: Upper Saddle River, NJ, 2002, pp. 186-195.

UNCONTROLLED COPY

7.4.4.6 Glass Refractive Index Determination, Scientific Working Group for Materials Analysis, *Forensic Science Communications,* Volume 7, No. 1, January 2005.

7.4.4.7 Sandercock, P.M.L. "Sample Size Consideration For Control Glass in Casework", Canadian Journal of Forensic Science, Volume 33, No. 4, 2000, pp. 173-185.

7.4.4.8 Hamer, Pamela, "Microscopic techniques for glass examination", in Forensic Examination of Glass and Paint, Analysis and Interpretation; Brian Caddy, ed, Taylor and Francis: London and New York, 2001, Ch. 3, Sec. 3.6, pp 56-64.

7.5 Direction-of-Impact

7.5.1 Purpose

This procedure is used to determine from which side a window pane was broken.

7.5.2 Minimum Standards and Controls

COPYRIGHT © 2023

7.5.2.1 The submitted glass fragments taken directly from the window frame must be properly labeled as to inside/outside orientation. This should be accomplished by marking the fragments still in the frame with the correct orientation at the time of collection by the investigator.

VIRGINIA

7.5.2.2 A sufficient amount of the total glass fragments from the broken pane must be submitted in order to reconstruct the pane and subsequently make an appropriate conclusion with regard to direction-of-impact. This should be accomplished by collecting and submitting all of the larger pieces, including those from the floor, those from the ground and those found in the frame.

DEPARTMENT OF FORENSIC SCIENCE

7.5.2.3 The broken glass source must be non-tempered. This determination cannot be made on a tempered glass source.

7.5.3 Analytical Procedures

7.5.3.1 Lay out broken pane fragments on paper.

7.5.3.2 Lay fragments in a consistent surface orientation based on float side fluorescence, paint or surface debris if possible.

7.5.3.3 Reconstruct the pane as completely as possible.

7.5.3.4 Determine point(s)-of-impact and attempt to identify radial cracks.

7.5.3.5 If radial cracks can be identified, examine ridges on these cracks. These ridges are perpendicular to the surface opposite the side-of-impact. 4-R Rule: "Ridges on Radial cracks are at Right angles to the Rear."

7.5.3.6 Using the correct inside or outside orientation for the broken pane provided by the investigator, determine the direction-of-impact.

7.5.4 References

7.5.4.1 Koons, Robert D., Buscaglia, JoAnn, Bottrell, Maureen, Miller, E.T. "Forensic Glass Comparisons", in Forensic Science Handbook, Volume 1, Second Edition; R. Saferstein, ed, Pearson Education, Inc.: Upper Saddle River, NJ, 2002, pp. 173-176.

UNCONTROLLED COPY

7.5.4.2 Nelson, D.F. "The Examination of Glass Fragments" in Methods of Forensic Science; A.S. Curry, ed, Interscience Publishers:London, 1965.

7.5.4.3 Glass Fractures, Scientific Working Group for Materials Analysis, *Forensic Science Communications,* Volume 7, No. 1, January 2005.

7.5.4.4 Thornton, John I., "Interpretation of physical aspects of glass evidence", in Forensic Examination of Glass and Paint, Analysis and Interpretation; Brian Caddy, ed, Taylor and Francis: London and New York, 2001, Ch. 6, Sec. 6.1 -6.6 pp. 97-114.

7.6 Sequence-of-Impact

7.6.1 Purpose

This procedure is used to determine the sequence in which multiple impacts have occurred in a broken glass pane.

COPYRIGHT © 2023

7.6.2 Minimum Standards and Controls

7.6.2.1 This determination can only be made on non-tempered glass sources. The pane must also hold together long enough for the pattern to develop. Typically, only laminated or wire reinforced panes will do so.

VIRGINIA DEPARTMENT OF FORENSIC SCIENCE

7.6.3 Analytical Procedures

7.6.3.1 Determine points-of-impact and identify radial cracks.

7.6.3.2 If multiple points-of-impact can be identified, examine the cracks formed by each impact and attempt to determine the relationship between these impacts. Cracks formed by a later impact will terminate at cracks already formed by an earlier impact.

7.6.3.3 Using these observations, determine the sequence of these impacts.

7.6.4 References

7.6.4.1 Koons, Robert D., Buscaglia, JoAnn, Bottrell, Maureen, Miller, E.T. "Forensic Glass Comparisons", in Forensic Science Handbook, Volume 1, Second Edition; R. Saferstein, ed, Pearson Education, Inc.: Upper Saddle River, NJ, 2002, pp. 176-177.

7.6.4.2 Nelson, D.F. "The Examination of Glass Fragments" in Methods of Forensic Science; A.S. Curry, ed, Interscience Publishers:London, 1965.

7.6.4.3 Glass Fractures, Scientific Working Group for Materials Analysis, *Forensic Science Communications,* Volume 7, No. 1, January 2005.

7.7 Documentation

7.7.1 For glass comparison or identification examinations, all physical properties determined for each item will be listed on a glass worksheet.

7.7.2 When refractive index values are determined by the GRIM3 system, a printed copy of the GRIM3 data and a "GRIM3 Instrumentation" worksheet, which lists the equipment and calibration oils used, will be included in each case file.

7.7.3 For direction-of-impact or sequence-of-impact examinations, photographs and/or sketches will be included.

UNCONTROLLED COPY

7.8 Formation of the Opinion in Glass Comparisons

The results of a glass comparison are generally reported using statements selected from the report wording guidelines in Section 7.9. The strength of an associative conclusion between glass samples is determined by factors such as the number of consistent particles found, the number of broken glass sources transferred and the uniqueness of the properties of the glass. The uniqueness of the refractive index of a glass sample is determined by evaluation of the frequency of occurrence of refractive indices from known glass samples encountered in casework. Frequency of occurrence data will only be considered for flat glass sources, since the current collection of refractive index data does not contain a sufficient sampling of other glass types such as headlight or container glass sources.

The DFS frequency of occurrence database shall be updated every twelve months, a hardcopy of the histogram retained, and the electronic database stored on the DFS intranet.

The factors used to form an opinion regarding an association between questioned samples and known glass sources will generally be assessed at the examiner's discretion. For cases where a strong association may be warranted, consultation with another qualified examiner is required and will be reflected in the notes. The number of particles associated and the number of broken glass sources transferred are usually the most important factors for consideration when comparing glass samples. The case notes will reflect the factors contributing to the strength of the conclusion to include the most recent DFS frequency of occurrence data. A hardcopy of the DFS frequency of occurrence data utilized shall be included with the case notes.

COPYRIGHT © 2023
VIRGINIA DEPARTMENT OF FORENSIC SCIENCE

7.9 Report Wording

7.9.1 Methods: Techniques utilized in the analysis shall be listed on the report.

Item _____ was examined using stereomicroscopy, a digital caliper, polarized light, polarized light microscopy (PLM), ultraviolet light, and the Glass Refractive Index Measurement system (GRIM3). It should be noted that this examination did not include elemental analysis.

7.9.2 Occasionally, one of the following statements may be appropriate for clarification purposes if there are multiple known samples:

7.9.2.1 Item_____ is a laminated glass composed of two layers which could be distinguished from each other based on differences in physical properties and/or refractive index.

7.9.2.2 Item_____ is a laminated glass composed of two layers which could not be distinguished from each other by physical properties and/or refractive index.

7.9.3 The results of the comparison, an appropriate conclusion statement, and level of association shall be reported with a "Terminology Key for Comparative Examinations" on the Certificate of Analysis.

7.9.3.1 Generally for glass, a "Level II – Association with Highly Discriminating Characteristics" conclusion will be reserved for glass comparisons that include elemental analysis of major, minor, and trace elements.

7.9.4 If the compared samples are found to <u>PHYSICALLY FIT</u>:

Examination and comparison of Items 1 and 2 revealed corresponding edges and features. These Items physically fit to form one continuous piece when corresponding edges and/or features are re-aligned in a specific sequence. It is therefore concluded that Items 1 and 2 were, at one time, a portion of a single unit (**Level I - Physical/Fracture Match**).

7.9.5 If the compared samples are <u>CONSISTENT/SIMILAR</u>:

7.9.5.1 For associations, additional explanation to justify the chosen level of association shall also be included.

UNCONTROLLED COPY

7.9.5.2 RESULTS:

7.9.5.2.1 The use of the term "consistent" must be accompanied by what the particles were "consistent" in (delineated physical properties and/or refractive index).

7.9.5.2.1.1 Physical properties should be delineated and include, but are not limited to color, thickness, temper, and type.

7.9.5.2.1.2 "Consistent" is generally used when there are no unexplainable differences in the testing conducted on the known and questioned samples.

7.9.5.2.1.3 Example:

The Item 2 glass sample/fragments/particle was/were consistent with the Item 5 glass in (delineated physical properties) and/or refractive index.

COPYRIGHT © 2023

7.9.5.2.2 If sample size or condition precludes a full examination (note: sample condition includes sample amount):

(#particles) of (*total #particles)* glass particles recovered from the combined debris from Items 1 and 2 were consistent with the Item 3 glass in refractive index.

VIRGINIA DEPARTMENT OF FORENSIC SCIENCE

7.9.5.3 CONCLUSIONS:

7.9.5.3.1 Based on the fragments/particles examined, it was concluded that these fragments/particles originated from either the broken glass source represented by Item ___ or another source of broken glass with the same properties/refractive index.

7.9.5.3.2 Based on the fragments/particles examined, it was concluded that these Item ___ recovered fragments/particles originated from either the corresponding broken glass source in Item ___(known) or another broken glass source with the same properties/refractive index.

7.9.5.3.3 When numerous glass particles with a wide range of refractive indices are present in a questioned item: Environmental origin could not be eliminated as a possible source of these particles.

7.9.5.4 Report Wording Examples:

7.9.5.4.1 The Item 1 glass fragments were consistent with the Item 3 glass in color, thickness, and refractive index. Based on the fragments examined, it was concluded that these Item 1 fragments originated from either the broken glass source represented by Item 3 or another source of broken glass with the same properties (**Level III – Association with Discriminating Characteristics**). This type of conclusion was reached because other glass sheets or products produced with the same properties would also be indistinguishable. Despite the utilization of discriminating techniques, the chance of finding coincidental associations are higher when no elemental analysis is performed.

7.9.5.4.1.1 Note: use of the Frequency of Average Thickness histogram may help support this level of association being assigned.

UNCONTROLLED COPY

7.9.5.4.2 Four (4) of twenty-one (21) glass particles recovered from Item 15 were consistent with one of the broken glass sources in Item 1 in refractive index. Based on the particles examined, it was concluded that these Item 15 recovered particles originated from either the corresponding broken glass source in Item 1 or another broken glass source with the same refractive index (**Level IV – Association with Limitations**). This type of conclusion was reached due to the limited number of characteristics available for comparison between the known and questioned sample. Physical properties could not be determined due to glass particle size.

7.9.6 If the compared samples are INCONCLUSIVE:

7.9.6.1 The glass particles recovered from Item 2 and the broken glass in Item 3 possess similar characteristics but also exhibit some differences. It cannot be determined whether these differences were due to the condition of the Item 2 particles or because the Item 2 particles were from a different source other than Item 3. Therefore, based on the particles examined, no meaningful conclusion could be reached (**Inconclusive**).

COPYRIGHT © 2023

7.9.7 If the compared samples are DIFFERENT, the reason for exclusion/elimination (differences in color, thickness, temper, type, refractive index, etc.) shall be included in the conclusion:

7.9.7.1 Based on the sample/fragments/particle examined, the Item 6 glass sample/fragments/particle could not be associated with the Item 10 glass due to differences in color (**Exclusion/Elimination**).

VIRGINIA DEPARTMENT OF FORENSIC SCIENCE

7.9.7.2 Based on the particles examined, glass particles recovered from the combined debris from Items 1 and 2 could not be associated with the Item 3 glass due to differences in refractive index (**Exclusion/Elimination**).

7.9.7.3 While generally not applicable, there may be an instance where an "Exclusion with Limitations" conclusion is drawn. In such instances, explanation and justification of such a conclusion is necessary.

7.9.8 In instances where two or more associations are being reported (e.g., cross transfers or multiple transfers), each association and appropriate level should be reported separately. An additional "Combined Conclusion" may be included which considers the overall significance of transferred materials, however, this will not include an assigned level.

7.9.8.1 It is considered unlikely/remote/extremely remote that the interchange of glass (or materials) described above occurred in any manner other than the contact of the two objects.

7.9.8.2 Given the associations described above, it is considered unlikely/remote/extremely remote that Item ___ originated from any source other than the source represented by Item ___.

7.9.8.3 Report Wording Example:

Eight (8) glass fragments recovered from Item 15 were consistent with one of the broken glass sources in Item 1 in color, thickness, type, temper, and refractive index. Ten (10) of twenty-one (21) glass particles recovered from Item 15 were consistent with the same broken glass source in Item 1 in refractive index. Based on the fragments and particles examined, it was concluded that these Item 15 fragments and particles originated from either the corresponding broken glass source in Item 1 or another source of broken glass with the same properties (**Level III – Association with Discriminating Characteristics**). This type of conclusion was reached because other glass sheets or products produced with the same properties would also be indistinguishable. Despite the utilization of discriminating techniques, the chance of finding coincidental associations are higher when no elemental analysis is performed.

UNCONTROLLED COPY

Two (2) glass fragments recovered from Item 15 were consistent with the other broken glass source in Item 1 in color, thickness, type, temper, and refractive index. Four (4) of twenty-one (21) glass particles recovered from Item 15 were consistent with the same broken glass source in Item 1 in refractive index. Based on the fragments and particles examined, it was concluded that these Item 15 fragments and particles originated from either the corresponding broken glass source in Item 1 or another broken glass source with the same refractive index (**Level III – Association with Discriminating Characteristics**). This type of conclusion was reached because other glass sheets or products produced with the same properties would also be indistinguishable. Despite the utilization of discriminating techniques, the chance of finding coincidental associations are higher when no elemental analysis is performed.

COMBINED CONCLUSION:

Given the associations described above, it is considered unlikely that the glass fragments and particles recovered from Item 15 originated from any source other than the sources represented by Item 1.

COPYRIGHT © 2023

7.9.9 If no glass particles were recovered:

7.9.9.1 No glass particles were recovered from the combined debris from Items 1 and 2 for comparison to the Item 3 glass.

VIRGINIA

7.9.9.2 No glass particles were recovered from Item 1 for comparison to Item 2.

DEPARTMENT

7.9.10 For recovered glass where a known sample is being requested for comparison purposes:

Glass particles were recovered from Item 1. If a possible source of glass is located, resubmit Item 1 along with a sample of the possible glass source for comparison.

OF

7.9.11 Full Report Wording Examples – Glass:

FORENSIC SCIENCE

7.9.11.1 Example 1

Item 5	Broken glass from window frame
Item 6	Three (3) glass fragments from suspect's shirt pocket

METHODS:

Items 5 and 6 were examined using stereomicroscopy, a digital caliper, and the Glass Refractive Index Measurement system (GRIM3). It should be noted that this examination did not include elemental analysis.

RESULTS AND INTERPRETATIONS:

The Item 6 glass fragments were consistent with the Item 5 glass in color, thickness, type, temper, and refractive index. Based on the fragments examined, it was concluded that these Item 6 fragments originated from either the broken glass source represented by Item 5 or another source of broken glass with the same properties (**Level III – Association with Discriminating Characteristics**). This type of conclusion was reached because other glass sheets or products produced with the same properties would also be indistinguishable. Despite the utilization of discriminating techniques, the chance of finding coincidental associations are higher when no elemental analysis is performed.

TERMINOLOGY KEY FOR COMPARATIVE EXAMINATIONS:

(Key with Levels)

UNCONTROLLED COPY

(Dates of testing and supporting examination documentation paragraph)

(Evidence disposition statement)

7.9.11.2 Example 2

Item 2	One (1) Finish Line athletic black T-shirt, size 3XL
Item 6	Pieces of broken windshield

METHODS:

Item 2 was examined visually. Debris recovered from Item 2 was examined using stereomicroscopy. Glass particles recovered from the debris from Item 2 were further examined using the Glass Refractive Index Measurement system (GRIM3).
Item 6 was examined using a digital caliper, ultraviolet light, and the GRIM3. It should be noted that this examination did not include elemental analysis.

COPYRIGHT © 2023

RESULTS AND INTERPRETATIONS:

Item 6 is a laminated glass composed of two layers which could be distinguished from each other based on differences in thickness and refractive index.

VIRGINIA DEPARTMENT OF FORENSIC SCIENCE

Eleven (11) of twenty (20) glass particles recovered from Item 2 were consistent with one layer of the Item 6 glass in refractive index. Based on the particles examined, it was concluded that these Item 2 recovered particles originated from either the corresponding broken glass layer in Item 6 or another broken glass source with the same refractive index. (**Level IV – Association with Limitations**). This type of conclusion was reached due to the limited number of characteristics available for comparison between the known and questioned sample. Physical properties could not be determined due to glass particle size.

TERMINOLOGY KEY FOR COMPARATIVE EXAMINATIONS:

(Key with Levels)

(Dates of testing and supporting examination documentation paragraph)

(Evidence disposition statement)

UNCONTROLLED COPY

8 HAIR

8.1 Analytical Approach

Items submitted for hair analysis will generally be limited to answering the following questions: Is the evidential material a hair or a fiber? If it is a hair, is it animal or human? If it is a human hair, is it suitable for nuclear DNA (PCR) typing?

8.1.1 Minimum Standards and Controls

8.1.1.1 Any mounting media with a stated expiration date will not automatically be discarded after the stated date. As long as the mounting media has not yellowed and continues to "flow" properly, as determined by the examiner, then it may continue to be used.

8.1.1.2 Record the general color and approximate length or range of the hair(s).

8.1.1.3 Either count the number of hairs present or provide an approximation as to the number present.

COPYRIGHT © 2023

8.2 Recovery of Hairs and/or Fibers

8.2.1 Purpose

VIRGINIA DEPARTMENT OF FORENSIC SCIENCE

To examine evidence to locate, recover and preserve hairs/fibers for identification and/or comparison purposes.

8.2.2 Summary

8.2.2.1 Generally speaking, submitting the article(s) of evidence to the laboratory for the examiner to process is the best approach to the recovery of hairs and/or fibers. There are instances where this is not practical or possible, such as recovering hairs and/or fibers from wall-to-wall carpeting, a large piece of furniture, or a vehicle. In these instances, the recovery may be accomplished at the scene and the recovered hairs and/or fibers submitted for examination.

8.2.2.2 The order of preference for the recovery of hairs and/or fibers is manual removal with forceps followed by taping with Post-it type notes or another low tack tape. Gentle scraping may be necessary in certain instances. Vacuuming is rarely, if ever, performed because the debris recovered represents far more than recent hair and/or fiber transfers.

8.2.3 Minimum Standards and Controls

8.2.3.1 The examiner shall change the examination paper between victim and suspect or scene exhibits. The examiner may change the paper between multiple victim, suspect or scene items, as necessary.

8.2.3.2 There should be only one exhibit opened at a time, unless two separate areas exist for this purpose.

8.2.3.3 The examiner shall change gloves and clean their tools between examining the evidence from the victim and the evidence from the suspect.

8.2.3.4 If possible, the victim's evidence and suspect's evidence should be examined in separate rooms. If this is not possible, then the separation of victim and suspect evidence in time and/or space will be necessary. Document in case file notes.

8.2.3.5 Use separate laboratory coats and evidence collection rooms, if available, for examining materials from victim and suspect to prevent possible cross-transfer contamination.

UNCONTROLLED COPY

8.2.3.6 Avoid drafts around the examination area.

8.2.4 Analytical Procedure

8.2.4.1 Spread a clean piece of paper on the examination surface.

8.2.4.2 Examine each item of evidence visually or with the aid of an illuminated magnifier, UV light or stereomicroscope.

8.2.4.2.1 If the item being examined contains hairs and/or fibers that are readily visible, collect these hairs and/or fibers with forceps. As hairs and/or fibers are collected, they should be placed in glassine packets or affixed to Post-it type notes.

8.2.4.2.2 Take care with bulky items which require repositioning on the examination table, to avoid the loss of hairs and/or fibers in the repositioning process.

COPYRIGHT © 2023

8.2.4.3 Post-it type notes or other low tack adhesive tapes may be used to recover hairs and/or fibers. The adhesive surface is placed on the item being examined and then pulled away. Hairs and/or fibers will adhere to the adhesive on the tape.

8.2.4.3.1 This method may be especially useful on large items or dark-colored items on which hairs and/or fibers of interest may be difficult to see.

VIRGINIA DEPARTMENT OF FORENSIC SCIENCE

8.2.4.3.2 High tack tape can be used to ensure complete recovery of hairs but only for knit articles such as hats, caps, masks, and scarves. If fibers are probative to the case, a high tack tape must not be used.

8.2.4.3.2.1 The only high tack tape approved for use is clear packing tape.

8.2.5 Scraping is generally discouraged as a method of collection for hairs and/or fibers. If scraping is necessary, the item to be examined is suspended above the examination surface and gently scraped with a spatula. Scraping in a downward direction allows surface hairs and/or fibers to fall onto the examination paper for collection.

8.3 Human and Animal Hair Identification

8.3.1 Purpose

The purpose of human and animal hair identification is to differentiate human hairs from animal hairs.

8.3.2 Safety Considerations

8.3.2.1 The use of xylene or xylene substitute requires caution. The process may be carried out in a well ventilated area or by using a "Nederman" point-of-use vent, if one is available.

8.3.3 Analytical Procedures

8.3.3.1 Stereomicroscopy may be used for screening to determine if the item is a hair, an apparent hair fragment, or a fiber.

8.3.3.2 Prepare temporary mounts of hairs/hair fragments in xylene substitute or water and evaluate using compound microscopy. Hair/hair fragments permanently mounted in Permount, Protexx or another permanent media may also be evaluated.

8.3.3.2.1 The presence of a root, scales, and fish eyes can be used to distinguish hairs, hair fragments, and fibers.

UNCONTROLLED COPY

8.3.3.2.2 When unable to view scales and there are not enough physical features to definitively determine if it is a hair/hair fragment, a scale cast may be performed and viewed using a compound microscope.

8.3.3.2.3 Apparent hair fragments may be identified as hair fragments using compound microscopy.

8.3.3.3 Based on the microscopic observations, determine if the hair is human or animal and record appropriate observations (e.g., color, banding, scales, medulla, distribution of pigment granules, and root shape). A Hair Worksheet may be used to record the characteristics observed.

8.3.4 References

8.3.4.1 Appleyard, H.M. Guide to the Identification of Animal Fibers; Wool Industries Research Association: Leeds, England, 1960.

8.3.4.2 Brunner, H. and Coman, B. The Identification of Mammalian Hair , Melbourne: Inkate Press Proprietary Ltd., 1974.

8.3.4.3 Hicks, John, Microscopy of Hair, FBI Issue 2, January 1977.

8.3.4.4 Wildman, A. B. "The Identification of Animal Fibers" J. *Forensic Science Society* 1961. 1 (2), 1-8.

8.3.4.5 Deedrick, Douglas W. and Koch, Sandra L., "Microscopy of Hair Part I: A Practical Guide and Manual for Human Hairs", *Forensic Science Communications*, Vol. 6, (1), January 2004.

8.3.4.6 Deedrick, Douglas W. and Koch, Sandra L., "Microscopy of Hair Part II: A Practical Guide and Manual for Animal Hairs", *Forensic Science Communications*, Vol. 6, (3), July 2004.

COPYRIGHT © 2023 VIRGINIA DEPARTMENT OF FORENSIC SCIENCE

8.4 Evaluation of Human Hairs for Nuclear DNA Suitability

8.4.1 Purpose

An evaluation of human hairs for nDNA suitability is done to determine whether nuclear DNA profiling may be possible. Only hairs which are in an active growth stage (anagen/catagen) or hairs with tissue attached may be suitable for nuclear DNA (PCR) typing.

8.4.2 Safety Considerations

8.4.2.1 The use of xylene or xylene substitute requires caution. The process may be carried out in a well ventilated area or by using a "Nederman" point-of-use vent, if one is available.

8.4.3 Analytical Procedure

8.4.3.1 Recovered items may be screened using the stereomicroscope to determine if the item is a hair or an apparent hair fragment.

8.4.3.1.1 Hair fragments are not suitable for nDNA testing.

8.4.3.2 The hair will be temporarily mounted (in xylene substitute or water) on a slide for microscopic evaluation. Hair permanently mounted in Permount, Protexx or another permanent media may also be evaluated.

8.4.3.2.1 The hair is examined using a compound microscope.

UNCONTROLLED COPY

8.4.3.2.2 If the hair is in a telogen growth stage with no tissue attached it is not suitable for nDNA testing.

8.4.3.2.3 If the hair is assessed to either be in an anagen/catagen growth stage or if tissue is present, then the examiner will conclude that the hair may be suitable for nuclear DNA (PCR) testing. The hair will be referred to the Forensic Biology (SX) Section.

8.4.3.3 The hair must be prepared for transfer to the SX Section.

8.4.3.3.1 Remove the hair and place it on a labeled Post-it type note or in a glassine envelope ensuring no mounting media remains on the hair. The Post-it type note is then placed in a sealed and labeled container for transfer.

8.4.3.3.2 If Permount or Protexx was applied to the hair, it must be removed. Xylene or Xylene substitute is used to dissolve the Permount or Protexx. The mountant and solvent are removed and the hair processed as above. Alternatively, liquid nitrogen may be used to remove the hair.

8.4.3.3.3 Complete a nuclear DNA (PCR) referral form and transfer the original form to the SX Section along with the evidence.

COPYRIGHT © 2023 VIRGINIA DEPARTMENT OF FORENSIC SCIENCE

8.4.4 References

8.4.4.1 Linch, C.A., Smith, S.L., Prahlow, J.A., "Evaluation of the human hair root for DNA typing subsequent to microscopic comparison", *Journal of Forensic Sciences* 1998; 43 (2), pp. 305-314.

8.4.4.2 Linch, C.A., J. A. Prahlow, "Postmortem Microscopic Changes Observed at the Human Head Hair Proximal End," *Journal of Forensic Sciences*, 2001, 46 (1), pp. 15-20.

8.4.4.3 Petraco, N., Fraas, C., Callery, F.X., and DeForest, P.R., "The Morphology and Evidential Significance of Human Hair Roots", *Journal of Forensic Sciences*, 1988, 33 (1), pp. 68-76.

8.5 Evaluation of Human Hairs for Mitochondrial DNA Suitability

8.5.1 Purpose

An evaluation of human hairs/hair fragments for mtDNA suitability is done to assist in the determination of which hairs/hair fragments out of multiple specimens may be most suitable for mtDNA testing.

8.5.2 Analytical Procedure

8.5.2.1 Human hairs will be temporarily mounted (in xylene substitute or water) on a glass slide for microscopic evaluation. Hairs permanently mounted in Permount, Protexx or another permanent media may also be evaluated.

8.5.2.2 Hairs will be viewed using a compound microscope and observable microscopic properties which may include color, length, diameter, size and distribution of pigment granules among others, are recorded.

8.5.2.3 Questioned hairs are grouped according to the observable microscopic properties and the grouping information for these hairs is communicated to the mtDNA examiner.

8.5.3 References

UNCONTROLLED COPY

8.5.3.1 Linch, Charles A., David A. Whiting, and Mitchell M. Holland, "Human Hair Histogenesis for the Mitochondrial DNA Forensic Scientist," *Journal of Forensic Sciences*, 2001, 46 (4), pp. 844-853.

8.6 Documentation

Examiners should have sufficient detail in the case notes related to the characteristics in each hair in order to support their conclusions. Include a copy of the nuclear DNA (PCR) referral form in the case file, as applicable.

8.7 Report Wording

8.7.1 Instrumentation and/or methods used in the examination shall be identified in the body of the report. The report will generally read:

The Item _____ hairs and hair fragments were examined using stereomicroscopy and compound microscopy.

COPYRIGHT © 2023

8.7.2 Select from the following when no hairs are referred for nDNA testing:

8.7.2.1 No hairs suitable for nuclear DNA testing were recovered from Item _____.

8.7.2.2 No hairs were present in Item _____ that were suitable for nuclear DNA testing.

VIRGINIA DEPARTMENT OF FORENSIC SCIENCE

8.7.2.3 The Item _____ hair was not suitable for nuclear DNA testing.

8.7.2.4 The Item _____ hair fragment was not suitable for nuclear DNA testing.

8.7.2.5 Item _____ consisted of numerous hair fragments that were not suitable for nuclear DNA testing.

8.7.2.6 Item ____ contained one (1) animal hair and one (1) animal hair fragment. Animal hairs and animal hair fragments are not suitable for DNA testing by the Virginia Department of Forensic Science.

8.7.3 When referring hairs for nDNA testing, the following may be used:

Item _____ contained one hair and several apparent hair fragments. The Item _____ hair may be suitable for nuclear DNA testing and has been referred to the Forensic Biology Section for analysis.

8.7.4 When reporting hairs not suitable for nuclear DNA testing and DNA evidence such as a buccal swab has been submitted, inform the Forensic Biology Section that they may terminate the SX exam and use the following statement to terminate the analysis of the item:

Based on the above analysis, Item ____ was not examined.

8.7.5 If a Certificate of Analysis is necessary for mitochondrial DNA grouping and/or suitability, examples of suitable language are provided below:

8.7.5.1 Item 1 pubic hair combings consisted of numerous fibers, animal hairs, animal hair fragments, two human hair fragments (sub-itemed 1A and 1B), and one human hair (sub-itemed 1C). Items 1A, 1B, and 1C may be suitable for mitochondrial DNA testing. Items 1A and 1B are most similar in physical properties and differ from Item 1C.

8.7.5.2 Two hairs recovered from the Item __ pants may be suitable for nuclear DNA testing and have been referred to the Forensic Biology Section for analysis.

UNCONTROLLED COPY

One hair fragment recovered from the Item __ pants was not suitable for nuclear DNA testing, however, meets the recommended length necessary for mitochondrial DNA testing suitability.

In addition, there were fibers of various colors and types, animal hairs, animal hair fragments, human hairs, and human hair fragments recovered from the Item __ pants. Animal hairs and animal hair fragments are not suitable for DNA testing by the Virginia Department of Forensic Science. The additional human hairs and human hair fragments were not suitable for either nuclear or mitochondrial DNA testing due to lack of tissue, improper growth stage, and insufficient length.

COPYRIGHT © 2023

VIRGINIA
DEPARTMENT
OF
FORENSIC SCIENCE

UNCONTROLLED
COPY

9 PAINT

9.1 Analytical Approach

9.1.1 The examiner is typically requested to compare a questioned paint sample or questioned paint deposits/smears on an object(s) to known paint samples. Instead of a Q vs K comparison, the examiner may be requested to conduct a make/model determination or to obtain information on an individual paint sample with no known paint sample available.

9.1.2 The examiner first conducts a macroscopic examination of the paint evidence. If appropriate, a fracture match comparison can be conducted. If the evidence to be examined is a liquid paint sample, the liquid is applied to clean glass slides and allowed to dry.

9.1.3 Paint can be characterized by a number of physical and chemical properties. The sample size and type of paint present in the sample will assist the examiner in determining which subsequent tests will be conducted. Record the approximate amount and/or size of paint sample as received. If a sufficient quantity of questioned paint exists, then the known and questioned paints will be compared and the properties noted in a side-by-side examination as follows: microchemical tests, fluorescence microscopy, SEM-EDS, and FTIR. The order of these exams and any additional testing is left to the discretion of the examiner and based on the evidence at hand.

9.1.4 During a microscopic examination, the examiner notes any physical properties which assist in characterizing a paint sample. These properties can include color, type (vehicular/ structural; enamel/lacquer; with/without decorative flake), texture, relative thickness, layer sequence and weathering. The microscopic examination is conducted separately for known and questioned paint particles. At this point in the examination, fluorescence microscopy may be useful in assessing the paint.

9.1.5 For the microchemical reaction tests, the examiner observes the reactions including the solubility of individual paint layers with certain solvents and chemical reagents: Chloroform, Acetone, Toluene, Diphenylamine (DPA), and/or LeRosen. Toluene will be used if a lacquer paint is indicated based on the reactions to Chloroform and Acetone. DPA is only necessary if a nitrocellulose lacquer is suspected. The use of LeRosen is optional.

9.1.6 The examiner shall also analyze paint samples using instrumental techniques. FTIR is a useful technique to compare the organic chemical composition of paint layers. SEM-EDS is useful in determining the elemental chemical composition of paint layers. If K and Q paints are sufficient for organic and elemental characterization, then fluorescence microscopy will also be employed for comparison of the samples.

9.1.7 After the analytical data has been obtained, the examiner compares the data for the known and questioned paint samples to evaluate the possible association of the K & Q.

9.1.8 When paint particles or smears are present for make/model determination, the examiner must first characterize the paint for suitability of searching. The physical and chemical characteristics of the paint are evaluated to determine if an OEM sequence is present. If an OEM sequence is present, each layer of the paint will be analyzed via FTIR and designated appropriately (OU2, OU1, OT1, OT2, etc.). Appropriate information for each layer is entered into the currently available reference collection of known automotive paints, the Paint Data Query (PDQ) database, and a search is conducted. [Note: pigments present in the topcoat layers should not be included when conducting searches as it may lead to false elimination.] Alternatively, the collected FTIR spectra may be searched against the PDQ entries using KnowItAll spectral search software. If successful, the search results will be reported as to the possible make, model and range of years in which the OEM sequence may have been used. If no OEM sequence is present, report the topcoat color of the paint and the presence of decorative flake, when applicable. If a partial OEM sequence is present, PDQ spectral searches may be attempted. Manufacturers' information and automotive refinish books should be used in conjunction with PDQ results to limit make/model/year results.

COPYRIGHT © 2023 VIRGINIA DEPARTMENT OF FORENSIC SCIENCE

UNCONTROLLED COPY

9.1.8.1 The substrate from which the recovered paint originated should be determined if possible. This can be done using physical characteristics or the chemistry of the paint. Paint from plastic substrates can be searched, however, the results of these searches may not yield suitable results as paint from plastic surfaces are currently underrepresented in the database.

9.1.8.2 Generally when performing spectral searching, the layers are searched in the following order: (1) OU1 primer surfacer layer – to determine the possible plants [viewing at least the top 200 hits], (2) OT2 clear/colorless layer – to determine the possible year range with each of the plants, (3) OU2 primer layer – to narrow results or eliminate plants, and (4) OT1 colored layer – to narrow results or eliminate plants. Alternatively, more than one paint layer spectrum may be searched at the same time using KnowItAll software.

9.1.8.3 Primer layers, especially the OU1 layer, may be compared with the Munsell color books to determine their Munsell values. These values may be added to a PDQ search to add further discrimination. This is especially useful for unusual, not color coordinated primers.

9.1.8.4 The PDQ content manual, internet searches, or contacts with manufacturing representatives may be used to correlate plants/years to makes/models. Refinish books should be searched to confirm the color was produced in the year range by the manufacturer. These books may also allow the examiner to further narrow the year range or determine a possible model if the information is provided. If the model information is not available in the repaint books, internet references, such as the Sherwin-Williams website, may provide it.

COPYRIGHT © 2023
VIRGINIA
DEPARTMENT
OF
FORENSIC SCIENCE

9.1.8.5 In some cases, it may be possible to provide additional lead information using Vehicle Identification Number (VIN) decoding. Using a combination of resources (repaint books, VIN Assist, and PDQi), many of a VIN's 17 characters can be limited, thereby reconstructing a partial VIN.

9.1.8.5.1 When make/model/year searches produce a limited number of possible plants, manufacturers, and years, a partial VIN may be sought.

9.1.8.5.2 Each position within the VIN, as well as each character, has a specific purpose or meaning:

Position	Purpose
1	Country of Origin
2	Manufacturer
3	Vehicle Type
4 - 9	Vehicle System Specifics (e.g., brakes, restraint, engine)
10	Model Year
11	Plant
12 - 17	Sequence Number

9.1.8.5.3 Based from information gleaned through PDQ resources, often the 1st, 2nd, 10th, and 11th characters in the VIN can be provided.

9.1.8.5.4 For example, if the PDQ search resulted in 2 possible plants, each plant will have an associated code (in the repaint books) which appears as the 11th character/position in the VIN.

9.1.8.5.5 Country of Origin, Manufacturer, and Model Year codes can be found using VinAssist and/or PDQi. Note: VIN codes are not necessarily the same as codes used for PDQi paint database. PDQi records could be searched for Make/Model/Year vehicles and based on the VIN's, the 10th character will provide the VIN code for the year.

UNCONTROLLED
COPY

9.2 Paint Recovery Techniques

9.2.1 Purpose

To recover foreign paint that might be present on an item of evidence to allow analysis of paint samples.

9.2.2 Minimum Standards and Controls

9.2.2.1 Thoroughly clean the examination area prior to the evidence being retrieved.

9.2.2.2 The examiner must change any examination paper between victim and suspect or scene exhibits.

9.2.2.3 The examiner may change the paper between multiple victim, suspect or scene items, as necessary.

COPYRIGHT © 2023

9.2.2.4 The examiner must change gloves and clean their tools between examining the evidence from the victim and the evidence from the suspect.

9.2.3 Analytical Procedures

VIRGINIA DEPARTMENT OF FORENSIC SCIENCE

9.2.3.1 Describe the evidence and note the condition (e.g., smear or damage presence and location, smear or particle color(s), EMT cuts, stains, and/or dried blood). Document the locations of any probative tears, paint deposits/smears, or other unusual features. Photographs may be included for support and/or to document the condition.

9.2.3.2 Conduct a thorough inspection of the item for any visible paint particles/deposits. These are collected in evidence containers which may include plastic or metal boxes, glassine envelopes, weighing paper or a paper evidence fold.

9.2.3.3 If no paint particles/deposits are readily observed, the examiner may use a magnifier/viewer or stereomicroscope for searching purposes. If tears or other damage are observed on an item, these areas may be cut out for further analysis. If particles/deposits are not observed and the evidence consists of textile materials then scraping will be conducted.

9.2.3.4 Scraping is done by holding or suspending the item over a clean sheet of paper and scraping the evidence thoroughly using a clean spatula. Any recovered debris is collected in an evidence container for further analysis.

9.2.4 References

9.2.4.1 Thornton, John I., "Forensic Paint Examination", Forensic Science Handbook, Volume 1, Second Edition, Pearson Education, Inc., 2002, pp. 429-478.

9.3 Macroscopic/Microscopic Examination

9.3.1 Purpose

To examine submitted paint evidence on a macroscopic and microscopic scale, noting physical properties, generally as the first step in the characterization and comparison of known and questioned paint samples.

9.3.2 Minimum Standards and Controls

9.3.2.1 Clean tools and work areas are a must.

UNCONTROLLED COPY

9.3.2.2 Thoroughly clean the examination area prior to the evidence being retrieved.

9.3.3 Analytical Procedures

9.3.3.1 The sample is examined with a stereomicroscope and the physical properties of each paint sample are noted and recorded. A paint worksheet may be used for this purpose when conducting microchemical testing. The layer sequence, color(s), type, texture(s), relative thickness(es) and any unusual features are noted for each sample, as appropriate. The examiner can also use the comparison microscope or the polarized light microscope in determining the physical characteristics of a paint sample.

9.3.3.2 Paint particles may be manipulated with fine forceps or another appropriate tool and may be dissected using a fine scalpel blade to allow the examiner to thoroughly characterize the physical properties.

9.3.3.3 Mineral oil or water should be used to compare the K & Q paint particles side-by-side on black and white backgrounds.

COPYRIGHT © 2023

9.3.3.4 If any meaningful differences are observed between the questioned and known particles, such as color, the examiner can discontinue the analysis.

9.3.4 References

VIRGINIA DEPARTMENT OF FORENSIC SCIENCE

9.3.4.1 "The Evidential Value of Automobile Paint Chips", Ryland, S.G. and Kopec, R.J., *Journal of Forensic Sciences*, Vol 24(1), 1979, pp. 140-147.

9.3.4.2 "Evaluation of Automobile Paint Flakes as Evidence", Gothard, J.A., *Journal of Forensic Sciences*, Vol 21(3), 1976, pp. 636-641.

9.4 Microchemical Tests

9.4.1 Purpose

Microchemical tests provide indications of the chemical nature of the paint and are used to classify the type of paint present (lacquer/enamel, dispersion/solution/nitrocellulose lacquer type).

9.4.2 Safety Considerations

9.4.2.1 Concentrated acids, solvents and reagent chemicals (e.g., formaldehyde) should be used in a well-ventilated area with proper precautions being exercised to minimize skin contact.

9.4.3 Minimum Standards and Controls

9.4.3.1 The following chemicals should be reagent grade or better:

acetone, chloroform, diphenylamine, concentrated sulfuric acid, formaldehyde, glacial acetic acid, and toluene

9.4.4 Analytical Procedures

9.4.4.1 Place paint particles in a welled (or depression) slide, a spot plate or on a microscope slide in the field of view of a stereomicroscope.

9.4.4.2 Apply the reagent or solvent to the particles. The solubility of each layer is noted on the paint worksheet. If LeRosen or diphenylamine are used, the effect of each reagent on the individual paint layers is noted.

UNCONTROLLED COPY

9.4.4.3 Sample size and type will assist the examiner in determining which tests will be conducted. Due to subtle differences that may be observed during microchemical comparisons, it is suggested that these be done in a side-by-side fashion.

9.4.4.4 Chloroform and acetone will be used if a sufficient quantity of paint is available. Toluene and diphenylamine will be used as appropriate for distinguishing lacquers. LeRosen is optional.

9.4.4.4.1 For those reagents where the QC check does not give an acceptable result, repeat the QC check with fresh reagent until an acceptable result is achieved.

9.4.4.5 If any meaningful differences are observed between the questioned and known paint particles, the examiner can discontinue the analysis.

9.4.5 References

9.4.5.1 "Application of the LeRosen Test to Paint Analysis", Linde, H.G. and Stone, R.P., *Journal of Forensic Sciences*, Vol 24(3), 1979, pp. 650-655.

COPYRIGHT © 2023

9.4.5.2 "Solubility Characterization of Automotive Paints", Thornton, J.I., Kraus, S., Lerner, B. and Kahane, D., *Journal of Forensic Sciences*, Vol 28(4), 1983, pp. 1004-1007.

9.4.5.3 Thornton, John I., "Forensic Paint Examination", in *Forensic Science Handbook*, Volume 1, Second Edition; R. Saferstein, ed, Pearson Education, Inc.: Upper Saddle River, NJ, 2002, pp. 460-462.

VIRGINIA DEPARTMENT OF FORENSIC SCIENCE

9.4.5.4 Scientific Working Group on Materials Analysis (SWGMAT), "Forensic Paint Analysis and Comparison Guidelines", *Forensic Science Communications*, Vol. 1 (2), July 1999.

9.4.5.5 Forensic Analysis of Paints (2010 Training Materials), F.B.I.

9.4.5.6 Forensic Paint Identification and Comparison (2011 Training Materials), Hooke College of Applied Sciences.

9.4.5.7 Forensic Examination and Comparison of Paint, Tapes, and Adhesives with a Focus on Interpretation of the Evidence (2011 Training Materials), Florida International University.

9.5 Fluorescence

9.5.1 Purpose

To determine and compare the fluorescence characteristics of paint samples, deposits or smears.

9.5.2 Safety Considerations

9.5.2.1 Do not look directly into the fluorescence source.

9.5.3 Analytical Procedure

9.5.3.1 Paint samples, deposits or smears are subjected to different wavelengths of light and the resulting fluorescence colors or lack thereof are noted on the fluorescence worksheet.

9.5.3.2 Paint samples, deposits or smears may be examined "dry" or mounted in a suitable "non-fluorescent" mounting medium, however, questioned and known samples must be examined simultaneously; side-by-side using the stand-alone polarized light microscope with the room lights off.

9.5.3.3 Fluorescence QC procedure:

UNCONTROLLED COPY

9.5.3.3.1 Perform fluorescence QC check prior to using the fluorescence microscope for casework. Use the fluorescence QC check sample and record observations on the fluorescence worksheet. If the fluorescence QC check fails to produce acceptable colors or intensity, troubleshoot the fluorescence microscope as appropriate and repeat the QC check. If the QC check continues to fail, take the fluorescence microscope out of service until the problem is resolved.

9.5.3.3.2 Fluorescence cubes to be used are WU (wide UV – range 330 – 385nm), WBV (wide blue violet – range 400 – 440nm), WB (wide blue – range 450 – 480nm) and WG (wide green – range 510 – 550nm). Record observations on a fluorescence worksheet

9.5.3.4 Paint smears are usually not homogeneous. Great care should be employed when interpreting the results of the comparison of paint smears with paint particles; some variation in fluorescence properties is expected. In addition, when two paint samples are compared, small differences may be seen if one of the samples has been subjected to sunlight more often than the other sample e.g., paint from a vehicle's hood compared to paint from the bottom portion of a fender.

9.5.3.5 Caution should be taken when eliminating samples based on fluorescence data alone. Detailed notes explaining the basis for the elimination are a must. Eliminations based on fluorescence will be reported as "due to differences in fluorescence".

COPYRIGHT © 2023
VIRGINIA
DEPARTMENT
OF
FORENSIC SCIENCE

9.6 Instrumental Analysis

9.6.1 FTIR

9.6.1.1 Safety Considerations

9.6.1.1.1 Do not look directly into the laser source.

9.6.1.1.2 The MCT detector for the microscope accessory must be cooled with liquid nitrogen. Insulated gloves and safety glasses shall be worn when filling the transport Dewar as well as the instrument reservoir.

9.6.1.2 Minimum Standards and Controls

9.6.1.2.1 Ensure that the daily QC has been performed.

9.6.1.2.2 Replicate analyses may be employed to ensure reproducibility or to demonstrate variability within a sample.

9.6.1.3 Analytical Procedures

For the examination of the individual layers of paint in a particle, the examiner must prepare the particle for analysis.

9.6.1.3.1 The sample may be prepared by using a scalpel to remove a very thin cross-section of any/all paint layers. This is followed by further sample flattening using a roller or microcompression cell with diamond windows.

9.6.1.3.2 Alternatively, thin peels or a very low angle cut may be made to expose the paint layers and each layer may be sampled one at a time for use in the microcompression cell.

UNCONTROLLED
COPY

9.6.1.3.3 The flattened sample is placed on a KBr window or left in the microcompression cell. With the FTIR microscope accessory, the examiner adjusts the aperture edges to mask all but individual layers. Spectra are obtained for each layer, when possible, using standard methods.

9.6.1.3.4 If any meaningful differences are observed in the spectra of the questioned and known samples, the examiner can discontinue the analysis.

9.6.1.4 References

9.6.1.4.1 "FT-Infrared Spectroscopy of Automobile Paints using Infrared Microscopy", Stoecklein, W. and Gloger, M., *Nicolet FT- IR Spectral Lines*, Spring- Summer 1988, pp. 2-6.

9.6.1.4.2 "Forensic Applications of IR Microscopy", Compton, S. and Powell, J., *American Laboratory*, Nov 1991, pp. 41- 51.

COPYRIGHT © 2023

9.6.2 Scanning Electron Microscopy/Energy Dispersive X-Ray (SEM-EDS)

9.6.2.1 Safety Considerations

9.6.2.1.1 The EDS detector system may require cooling with liquid nitrogen. Insulated gloves and safety glasses shall be worn when filling the Dewar.

VIRGINIA DEPARTMENT OF FORENSIC SCIENCE

9.6.2.2 Minimum Standards and Controls

9.6.2.2.1 To minimize take-off angle effects, paint samples should be flat and mounted normal to the electron beam.

9.6.2.3 Analytical Procedures

9.6.2.3.1 The sample is mounted on a sample stub covered with carbon adhesive tape (flat for single layer paint or on edge for multilayered paint, shavings may also be used). Due to potential heterogeneity within the paint layer, the sample should be at least 2mm in length whenever possible.

9.6.2.3.2 A representative X-ray spectrum is collected from each layer of each sample (K and Q). A hard copy is printed to document the elemental composition.

9.6.2.3.3 Comparison of K and Q samples is made on a qualitative basis; some variation in elemental concentration is not uncommon.

9.6.2.4 References

9.6.2.4.1 "Analysis Protocol for Discrimination of Automotive Paints by SEM- EDXA Using Beam Alignment by Current Centering", Beam, T.L. and Willis, W.V., *Journal of Forensic Science*, Vol 35(5), 1990, pp. 1055- 1063.

9.6.2.4.2 Scientific Working Group on Materials Analysis (SWGMAT)., "Standard Guide for Using Scanning Electron Microscopy/X-ray Spectrometry in Forensic Paint Examinations", *Forensic Science Communications*, Vol. 4 (4), October 2002.

9.7 Documentation

UNCONTROLLED COPY

9.7.1 At a minimum, each case file will include a paint worksheet(s) (as applicable), any notes detailing physical properties and item description, hard copies of all spectra generated during the analysis and instrumental conditions for all analyses conducted unless otherwise included in the SOP.

9.7.2 Make/model determinations:

9.7.2.1 For searches using the PDQ software, the coding searched and the resulting number of hits should be included in the case file.

9.7.2.2 For searches using the KnowItAll software, spectral evaluation of one paint layer provides a listing of the possible plants of origin. PDQ worksheets may be subsequently used to document narrowing year ranges. Both the listing of the possible plants of origin and the PDQ worksheets must be present in the case file. Alternatively, more than one paint layer spectrum may be searched at the same time using KnowItAll software.

9.7.2.3 FTIR spectra of representative hits must be included in the file for direct comparison. At least one spectrum per layer per plant of origin, if available, is needed for case file documentation. If a wide year range is indicated, additional spectra may be printed, when possible, to document these findings.

9.7.2.4 Comparable colors (color code and/or name) found when searching the refinish books should be documented.

COPYRIGHT © 2023
VIRGINIA DEPARTMENT OF FORENSIC SCIENCE

9.8 Report Wording

9.8.1 Methods: Techniques utilized in the analysis shall be listed on the report.

Item _____ was examined using stereomicroscopy, microchemical tests, fluorescence microscopy, Fourier Transform Infrared Spectrophotometry (FTIR), and Scanning Electron Microscopy-Energy Dispersive X-Ray Spectrometry (SEM-EDS).

9.8.2 Topcoat color and decorative flake presence, when applicable, must be reported when observed. Number of particles may be used in any of the examples and is especially useful when indicating a limited amount of sample (e.g., “Two minute multilayered red paint particles…”).

9.8.3 The results of the comparison, an appropriate conclusion statement, and level of association shall be reported with a “Terminology Key for Comparative Examinations” on the Certificate of Analysis.

9.8.4 If the compared samples are found to PHYSICALLY FIT:

Examination and comparison of one (1) of the six (6) blue paint particles in Item 1 with the Item 2 blue paint chip revealed corresponding edges and features. These Items physically fit to form one continuous piece when corresponding edges and/or features are re-aligned in a specific sequence. It is therefore concluded that this Item 1 particle and Item 2 were, at one time, a portion of a single unit (**Level I - Physical/Fracture Match**).

9.8.5 If the compared samples are CONSISTENT/SIMILAR:

9.8.5.1 For associations, additional explanation to justify the chosen level of association shall also be included.

9.8.5.2 RESULTS:

9.8.5.2.1 The use of the term “consistent” must be accompanied by what the particles were “consistent” in (colors, textures, types and so on). This term is generally used when there are no unexplainable differences in the testing conducted on the known and questioned samples.

UNCONTROLLED COPY

The recovered Item 1 multilayered blue paint particles with decorative flake were consistent with the Item 2 multilayered blue paint with decorative flake in colors, textures, types, layer sequence, and chemical compositions.

9.8.5.2.2 "Chemical compositions" is applicable for multilayered paint particles suitable for FTIR and/or SEM-EDS. "Chemical composition" includes both organic and elemental composition. There may be an occasion when one or both of these terms is used in lieu of "chemical" composition.

9.8.5.2.3 For paint cases where multilayered paint particles with feathering effects or missing layer structure, but with everything else consistent:

The recovered Item 1 multilayered gray paint particles with decorative flake were consistent with the Item 2 multilayered gray paint with decorative flake in corresponding (or respective) colors, textures, types, layer sequence, and chemical compositions.

COPYRIGHT © 2023

9.8.5.2.4 It is recognized that there may be instances when, based on the data, the term "similar" may be more appropriately substituted for "consistent". The reason for the use of the term "similar" in lieu of "consistent" must be explained in the report.

VIRGINIA DEPARTMENT OF FORENSIC SCIENCE

9.8.5.2.5 There may be an occasion when these terms are used in the same sentence:

The multilayered green paint particles in Items 1 and 2 were consistent in colors, textures, types and layer sequence, and were similar in chemical composition because of slight differences in organic composition.

9.8.5.2.6 If sample size or condition precludes a full examination (note: sample condition includes sample amount):

The red paint particles in Items 1 and 2 were consistent in colors and types (or in whatever tests were conducted). Sample condition precluded a complete analysis.

9.8.5.3 CONCLUSIONS:

9.8.5.3.1 Based on the particles examined, it was concluded that the smears on Item 1 originated from either the top layer of the Item 2 paint or another source of paint with the same _____. (color, type, composition, etc.)

9.8.5.3.2 Based on the particles examined, it was concluded that the Item 1 paint had a common origin with either Item 2 or another source of paint with the same _____ (colors, textures, types, layer sequence, and chemical compositions).

9.8.5.3.3 Based on the particles examined, it was concluded that the paints in Items A-Z originated from either the same source or different sources painted in the same manner.

9.8.5.3.4 Based on the particles examined, it was concluded that the black paint in Item 1 originated from either the source represented by Item 2 or a different source of paint with the same properties.

9.8.5.4 Report Wording Examples:

9.8.5.4.1 The multilayered dark red paint particles in Items 3 and 4 were consistent in colors, textures, types, layer sequence, and chemical compositions. Based on the particles examined, it was concluded that the paints in Items 3 and 4 originated from either the

UNCONTROLLED COPY

same source or different sources painted in the same manner (**Level II – Association with Highly Discriminating Characteristics**). This type of conclusion was reached because Items 3 and 4 both exhibit architectural paint systems with (number) layers of varying colors and chemistries. The layer structure of architectural paint is dictated by a number of factors (color choice, price, desired properties, etc.) that are unlikely, though not impossible, to be reproduced in another viable source of paint. It should be noted that the techniques used in this comparative analysis can typically distinguish architectural paint systems/layers with differing colors and/or chemistries.

9.8.5.4.2 Silver paint particles with decorative flake were recovered from the Item 2 debris. These Item 2 particles included a four-layered sequence physically and chemically consistent with paint originating from a metal automotive substrate.

The recovered Item 2 multilayered silver paint particles with decorative flake were consistent with the Item 14 multilayered silver paint with decorative flake in colors, textures, types, layer sequence, and chemical compositions. Based on the particles examined, it was concluded that these Item 2 paint particles originated from either the paint source represented by Item 14 or another source of paint with the same colors, textures, types, layer sequences, and chemical compositions (**Level III – Association with Discriminating Characteristics**). This type of conclusion was reached because other vehicles produced at the same manufacturing plant and painted with the same type of paint system would also be indistinguishable. It should be noted that the techniques used in this comparative analysis can typically distinguish paint systems from different assembly plants.

COPYRIGHT © 2023
VIRGINIA
DEPARTMENT
OF
FORENSIC SCIENCE

9.8.5.4.3 Foreign blue smears with decorative flake were present on the Item 5 multilayered gold paint particles with decorative flake. The condition of the Item 5 blue smears precluded a complete analysis and comparison with the Item 13 paint. The blue paint smears with decorative flake present on Item 5 and the Item 13 uppermost blue paint layer with decorative flake were consistent in color, type, and organic composition. Based on the particles examined, it was concluded that the smears on Item 5 originated from either the top blue layer of the Item 13 paint or another source of paint with the same color, type, and organic composition (**Level IV – Association with Limitations**). This type of conclusion was reached due to the limited characteristics available for comparison as a result of the limited size and/or poor condition of the questioned sample.

9.8.6 If the compared samples are <u>INCONCLUSIVE</u>:

9.8.6.1 Minute smears, which appear white, were present on the Item 3 multilayered red paint particles with decorative flake. The Item 3 apparent white smears were composed predominantly of clear colorless paint smears. The clear colorless smears present on Item 3 and the Item 4 clear colorless layer possess similar characteristics but also exhibit some differences. It cannot be determined whether these differences were due to the condition of the Item 3 paint smears or because the Item 3 paint smears were from a different source other than the source represented by Item 4. Therefore, based on the particles examined, no meaningful conclusion could be reached (**Inconclusive**).

9.8.6.2 The condition of the Item 1 blue smears precluded a complete analysis and comparison with the Item 2 blue paint (**Inconclusive**).

9.8.6.3 No accurate color comparison could be made with the Item 1 red paint with decorative flake due to the sample condition of the Item 2 smears (**Inconclusive**).

9.8.7 If the compared samples are <u>DIFFERENT</u>, the reason for exclusion/elimination (differences in color, type, texture, layer sequence, or chemical composition) shall be included in the conclusion:

UNCONTROLLED
COPY

9.8.7.1 Based on the particles examined, the orange paint particles in Items 1 and 2 could not be associated due to differences in color (**Exclusion/Elimination**).

9.8.7.2 Based on the samples examined, green paint smears with decorative flake present on Item 1 could not be associated with the Item 2 green paint with decorative flake due to differences in chemical composition (**Exclusion/Elimination**).

9.8.7.3 While generally not applicable, there may be an instance where an "Exclusion with Limitations" conclusion is drawn. In such instances, explanation and justification of such a conclusion is necessary.

9.8.8 In instances where two or more associations are being reported (e.g., cross transfers or multiple transfers), each association and appropriate level should be reported separately. An additional "Combined Conclusion" may be included which considers the overall significance of transferred materials, however, this will not include an assigned level.

COPYRIGHT © 2023

9.8.8.1 It is considered unlikely/remote/extremely remote that the interchange of paints (or materials) described above occurred in any manner other than the contact of the two vehicles (or objects).

9.8.8.2 Given the associations described above, it is considered unlikely/remote/extremely remote that Item ___ originated from any source other than the source represented by Item ___.

VIRGINIA DEPARTMENT OF FORENSIC SCIENCE

9.8.8.3 Report Wording Example:

Foreign multilayered off-white paint particles were recovered from the Item 1 multilayered light blue paint particles with decorative flake. These Item 1 off-white particles included two paint sequences: a three-layered sequence on a plastic automotive substrate and a four-layered sequence physically and chemically consistent with paint originating from a metal automotive substrate.

The Item 1 foreign three-layered off-white paint was consistent with the Item 7 off-white paint in colors, textures, types, layer sequence, and chemical compositions. Based on the particles examined, it was concluded that these Item 1 paint particles originated from either the paint source represented by Items 7 or another source of paint with the same colors, textures, types, layer sequences, and chemical compositions (**Level III – Association with Discriminating Characteristics**). This type of conclusion was reached because other vehicles produced at the same manufacturing plant and painted with the same type of paint system would also be indistinguishable. It should be noted that the techniques used in this comparative analysis can typically distinguish paint systems from different assembly plants.

The Item 1 foreign four-layered off-white paint was consistent with the Item 8 off-white paint in colors, textures, types, layer sequence, and chemical compositions. Based on the particles examined, it was concluded that these Item 1 paint particles originated from either the paint source represented by Item 8 or another source of paint with the same colors, textures, types, layer sequences, and chemical compositions (**Level III – Association with Discriminating Characteristics**). This type of conclusion was reached because other vehicles produced at the same manufacturing plant and painted with the same type of paint system would also be indistinguishable. It should be noted that the techniques used in this comparative analysis can typically distinguish paint systems from different assembly plants.

Foreign light blue paint smears were present on Item 7 which contained a mixture of clear colorless paint and light blue paint with decorative flake.

The Item 7 foreign light blue smears were consistent with the top two layers of the Item 1 light blue paint with decorative flake in colors, types, and chemical compositions. Based on the particles examined, it was concluded that these Item 7 smears originated from either the top two

UNCONTROLLED COPY

layers of the Item 1 paint or another source of paint with the same colors, types, and chemical compositions (**Level IV – Association with Limitations**). This type of conclusion was reached due to the limited characteristics available for comparison as a result of the limited size and/or poor condition of the questioned sample.

COMBINED CONCLUSION:

It is considered unlikely that the interchange of paints described above occurred in any manner other than the contact of these two vehicles.

9.8.9 If no paint was recovered:

9.8.9.1 No paint was recovered from Item 1 for comparison to Item 2

9.8.9.2 No vehicular paint was recovered from Item _____.

9.8.9.3 No apparent vehicular paint was recovered from Item _____.

COPYRIGHT © 2023

9.8.10 For PDQ Purposes:

9.8.10.1 When a search of the PDQ paint database was successful:

VIRGINIA DEPARTMENT OF FORENSIC SCIENCE

A search of the PDQ (Paint Data Query) database indicated that the Item _____ foreign multilayered red paint with decorative flake was consistent with paint used on the following vehicles:

1998-1999 Toyota Avalon
1998-2001 Toyota Camry

It should be noted that not all makes/models/years of vehicles produced by each manufacturer are present in the PDQ database.

If performed, VIN decoding wording would appear here

Paint particles recovered from Item ____ were suitable for comparison purposes. If a possible source of paint is located, resubmit Item ___ along with a sample of the possible paint source for comparison.

9.8.10.2 VIN Decoding Examples:

9.8.10.2.1 A Vehicle Identification Number (VIN), which is a unique identifier for a vehicle, is comprised of 17 characters. Each position within the VIN, as well as each character, has a specific purpose or meaning. Based on the examination performed, the Item 2 foreign multilayered black paint with decorative flake would have originated from a vehicle with the following partial VIN:

Position	Purpose	Options for VIN Characters and Their Meanings
1	Country of Origin	1 = United States 3 = Mexico
2	Manufacturer	G = General Motors
3	Vehicle Type	
4 - 9	Vehicle System Specifics (e.g., brakes, restraint, engine)	

UNCONTROLLED COPY

10	Model Year	If 11th character is "S", the 10th character may be: 8 = 2008 B = 2011 9 = 2009 C = 2012 A = 2010 D = 2013 If 11th character is "G", the 10th character may be: 3 = 2003 B = 2011 4 = 2004 C = 2012 5 = 2005 D = 2013 6 = 2006 E = 2014 9 = 2009 F = 2015 A = 2010
11	Plant	S = Ramos Arizpe, Mexico G = Silao, Mexico
12 - 17	Sequence Number	

COPYRIGHT © 2023

9.8.10.2.2 A Vehicle Identification Number (VIN), which is a unique identifier for a vehicle, is comprised of 17 characters. Each position within the VIN, as well as each character, has a specific purpose or meaning. Based on the examination performed, the Item 2 foreign multilayered red paint with decorative flake would have originated from a vehicle with the following partial VIN:

VIRGINIA DEPARTMENT OF FORENSIC SCIENCE

Character 1 – 1
Character 2 – J or D
Character 3 – 4
Character 10 – A or B
Character 11 – C

9.8.10.3 For samples where an OEM sequence is not present:

9.8.10.3.1 The red paint (paint particles, paint smears) with decorative flake present (in the debris from, on) Item ____ was consistent with (indicative of) a repaint; therefore, no make/model determination could be made. The red paint (paint particles, paint smears) with decorative flake was (were) suitable for comparison purposes. If a possible source of paint …

9.8.10.3.2 Item 1 consisted of a foreign black paint particle that was not suitable (include why) for make/model determination but was suitable for comparison purposes. If a possible source of paint…

9.8.10.3.3 Item 1 consisted of a two-layered foreign black paint particle that was searched using the PDQ (Paint Data Query) database. The paint particle consisted only of topcoats, therefore the search results did not indicate a possible make/model of origin.

9.8.10.3.4 Item 1 consisted of a multilayered black paint sequence on a plastic substrate. A search of the PDQ (Paint Data Query) database was conducted, the results of which did not indicate a possible make/model of origin. It should be noted that painted plastic substrates are not well represented in the database.

9.8.10.4 For recovered paint where samples are being requested for comparison purposes the report will generally read:

Foreign (color) paint (with decorative flake) was recovered from Item __ which was suitable for comparison purposes. If a possible source of paint is located, resubmit Item __ along with a sample of the possible paint source for comparison.

UNCONTROLLED COPY

9.8.11 Full Report Wording Examples – Paint:

9.8.11.1 Example 1

Item 3	Paint chips from victim's vehicle
Item 4	Paint chips from suspect's vehicle

METHODS:

Items 3 and 4 were examined using stereomicroscopy, microchemical tests, fluorescence microscopy, Fourier Transform Infrared Spectrophotometry (FTIR), and Scanning Electron Microscopy-Energy Dispersive X-Ray Spectrometry (SEM-EDS).

RESULTS AND INTERPRETATIONS:

The multilayered white paint particles in Items 3 and 4 were consistent in colors, textures, types, layer sequence, and chemical compositions. Based on the particles examined, it was concluded that the white paints in Items 3 and 4 originated from either the same source or different sources painted in the same manner (**Level II - Association with Highly Discriminating Characteristics**). This type of conclusion was reached because the paints both exhibit characteristics that are atypical of original equipment manufacturer (OEM) paints. Due to the presence of three repaint layers over four OEM layers, it is unlikely that even other vehicles produced at the same manufacturing plant in approximately the same time frame would also be indistinguishable. Furthermore, any other vehicles painted in the same distinctive manner would have to be damaged and missing paint in order to be considered viable sources of the questioned paint.

COPYRIGHT © 2023
VIRGINIA
DEPARTMENT
OF
FORENSIC SCIENCE

TERMINOLOGY KEY FOR COMPARATIVE EXAMINATIONS:

(Key with Levels)

(Dates of testing and supporting examination documentation paragraph)

(Evidence disposition statement)

9.8.11.2 Example 2

Item 3	Victim's shirt
Item 4	Victim's pants
Item 5	Can of green spray paint

METHODS:

Items 3 and 5 were examined using stereomicroscopy, microchemical tests, fluorescence microscopy, Fourier Transform Infrared Spectrophotometry (FTIR), and Scanning Electron Microscopy-Energy Dispersive X-Ray Spectrometry (SEM-EDS).

RESULTS AND INTERPRETATIONS:

Green paint recovered from the Item 3 clothing and the Item 5 green paint were consistent in color, texture, type, and chemical composition. Based on the particles examined, it was concluded that the Item 3 green paint originated from either Item 5 or another source of paint with the same color, texture, type, and chemical composition (**Level III – Association with Discriminating Characteristics**). This type of conclusion was reached because spray paints are mass-produced, and other spray paint produced with the same properties as Item 5 would also

UNCONTROLLED
COPY

be indistinguishable from this paint. It should be noted that the techniques used in this comparative analysis can typically distinguish most spray paint products.

Based on the above results, Item 4 was not analyzed.

TERMINOLOGY KEY FOR COMPARATIVE EXAMINATIONS:

(Key with Levels)

(Dates of testing and supporting examination documentation paragraph)

(Evidence disposition statement)

COPYRIGHT © 2023

VIRGINIA
DEPARTMENT
OF
FORENSIC SCIENCE

UNCONTROLLED
COPY

10 PRIMER RESIDUE

10.1 Analytical Approach

10.1.1 One or more Primer Residue Evidence Handling Worksheets are generated. For results data set purposes, each Primer Residue kit is to be considered a separate item. The Primer Residue kit is opened and each of the sample vials are labeled, and the stub surfaces are visually examined. If debris is present go to Section 10.2, Carbon Evaporation or use the ASPEX Explorer in VP mode. Otherwise, proceed to Section 10.3, Automated Scanning Electron Microscope/Energy Dispersive X-ray System (SEM-EDS) Analysis.

10.1.2 Minimum Standards and Controls

10.1.2.1 Primer Residue kits are ordered by DFS to our specifications. Two percent of the Primer Residue kits in each new lot must pass QC inspection before any kits from that lot are released to User Agencies.

COPYRIGHT © 2023

10.1.2.1.1 A visual inspection is made of the Primer Residue kits to note whether all components of the kit are present. Any visible debris on the collection surface is noted. Both samples from each kit are analyzed via automated SEM-EDS. A copy of the Primer Residue SEM/EDS Worksheet and Analysis Summary Sheet is retained. Samples from these kits become future negative control samples for automated Primer Residue runs.

VIRGINIA DEPARTMENT OF FORENSIC SCIENCE

10.2 Carbon Evaporation

10.2.1 Purpose

10.2.1.1 Carbon evaporation, or coating, makes the sample electrically conductive and reduces charging in the SEM. In addition, carbon does not interfere with EDS analysis.

10.2.1.2 Special Considerations that should be noted with this technique: Carbon evaporation reduces charging on samples containing visible debris. Therefore, the overall automated SEM-EDS run time may be shortened due to reduction in charging of the sample.

10.2.2 Safety Considerations

10.2.2.1 Carbon evaporation produces a bright arc at the carbon rod tip source. During evaporation, the carbon rod should only be viewed through an appropriate welder's glass.

10.2.3 Minimum Standards and Controls

10.2.3.1 A negative control is included with all Primer Residue samples to be coated for a given run. This control is separate from the negative control described in 10.3.3.6.

10.2.3.2 A glass slide is used to evaluate the coating.

10.2.4 Analytical Procedures

10.2.4.1 The bottom of the sample stubs are labeled before coating samples.

10.2.4.2 The carbon evaporator operations manual is followed.

10.2.4.3 The sample plenary stage is slowly rotated during the coating procedure.

10.2.5 References

UNCONTROLLED COPY

10.2.5.1 Gabriel, B. L. SEM: A User's Manual for Materials Science. 1985, pp.156 -161. ISBN: 0-87170-202-9.

10.3 Automated SEM-EDS Primer Residue Analysis, ASPEX: VP2000 and Explorer

10.3.1 Purpose

10.3.1.1 Automated SEM-EDS is used to search samples for potential primer residue particles. These instruments search a user defined area at a magnification of 500X on each sample. Generally speaking, a particle characteristic of primer residue is defined as a particle with a spherical or molten appearance (noncrystalline) containing the elements: Pb, Ba and Sb. Particles consistent with primer residue would have similar morphology and typically include 2 of the 3 elements listed above. Other elemental profiles for consistent particles and additional elements allowable in primer residue particles can be found in 10.3.5.2.

10.3.1.2 The ASPEX VP2000 and ASPEX Explorer instruments are operated in high vacuum mode.

COPYRIGHT © 2023

10.3.1.3 This is a sensitive, non-destructive technique used to detect the primer residue component of gunshot residue.

10.3.2 Safety Considerations

VIRGINIA DEPARTMENT OF FORENSIC SCIENCE

10.3.2.1 The SiLi EDS detector system must be cooled with liquid nitrogen. Insulated gloves and safety glasses shall be worn when filling any Dewar.

10.3.2.2 During filament replacement the beam power supply located on the back panel of the beam supply under the bias knob is disabled.

10.3.2.3 Be aware of elevated temperatures when changing a filament which has been in operation.

10.3.2.4 If operating in variable pressure mode, the instrument is changed to high vacuum mode before changing the filament. In addition, the beam is always turned off before changing vacuum modes.

10.3.3 Minimum Standards and Controls

10.3.3.1 The EDS detector is electronically calibrated prior to an automated primer residue run. The Cu Lα peak should be symmetrical through the peak centroid line as should the Cu Kα peak. The centroids of these peaks will be monitored during the automated run. As a matter of QA these peaks should be within 0.03 KeV of the nominal values. FWHM of Cu Kα will also be monitored during the automated run. It should not exceed 170 eV. If it is not possible to obtain the appropriate values, recalibrate the EDS detector and rerun the samples. If it is still not possible to obtain the appropriate values, contact ASPEX service.

10.3.3.2 Before an automated primer residue run begins, the SEM filament must be saturated and aligned with the manual gun centering knobs on a copper standard where beam damage will not occur. Also, the filament is electronically centered by monitoring the BSED brightness and contrast of the copper standard in the line scan mode. Filament centering is adjusted in the advanced filament application.

10.3.3.3 A positive control is a sampling device containing known primer residue particles.

10.3.3.4 The backscatter detector thresholds are set to detect primer residue particles in the 1 micron size range.

10.3.3.5 A QC analysis is run on a ENFSI proficiency sample at the beginning of the run, then on the positive control after 3 samples have been examined, and on the same area on the positive

UNCONTROLLED COPY

control at the end of the run. After the run is complete, data from the ENFSI proficiency sample is mapped. A total of 90% or greater of the synthetic gunshot residue particles, down to and including particles as small as 1.2 microns must be found for the QA to pass. In addition, 10 particle images and their corresponding spectra from each of the positive controls are generated showing primer residue particles found in the 1 micron size range. The sheets containing the ten images and spectra and the ENFSI proficiency sample map are stored in a QC notebook in the SEM lab. If a primer residue particle in the 1 micron size range is not found on the positive control or if the ENFSI proficiency sample map does not pass the QA criteria listed above, and any case sample does not contain particles characteristic of primer residue, the backscatter detector threshold must be readjusted and the samples rerun.

10.3.3.6 In every automated SEM-EDS primer residue run, a negative control is analyzed just before the final positive control field. The negative control is the first sample to be loaded in the sample holder. The negative control sample is discarded after the automated primer residue run is complete.

10.3.3.7 Approximately once a month the photographic unit of the SEM is checked using an ASTM measurement standard and a high resolution, gold islands on carbon sample. Maintenance is performed if the image cannot be stigmated.

COPYRIGHT © 2023

10.3.4 Analytical Procedures

VIRGINIA DEPARTMENT OF FORENSIC SCIENCE

10.3.4.1 A primer residue analysis setup is performed by setting up or using an existing .afa file.

10.3.4.2 A new automated run is setup. DHD_.zrr (the most recent file available) and gsrchem139.vcf files are selected when using the ASPEX VP 2000 instrument. DHD_zrr (the most recent file available) and GSR25Oms.vcf files are selected when using the ASPEX Explorer instrument. Once the automated run is complete, the QC report is printed and saved.

10.3.4.3 Samples are loaded into the SEM as described on the Primer Residue Worksheet SEM/EDS. Sample location and placement is indicated on the stage map diagrams below. The ENFSI proficiency sample will be located next to the primer residue reference standard in the permanent sample holder bar.

UNCONTROLLED COPY

10.3.4.3.1 ASPEX Explorer Stage Map

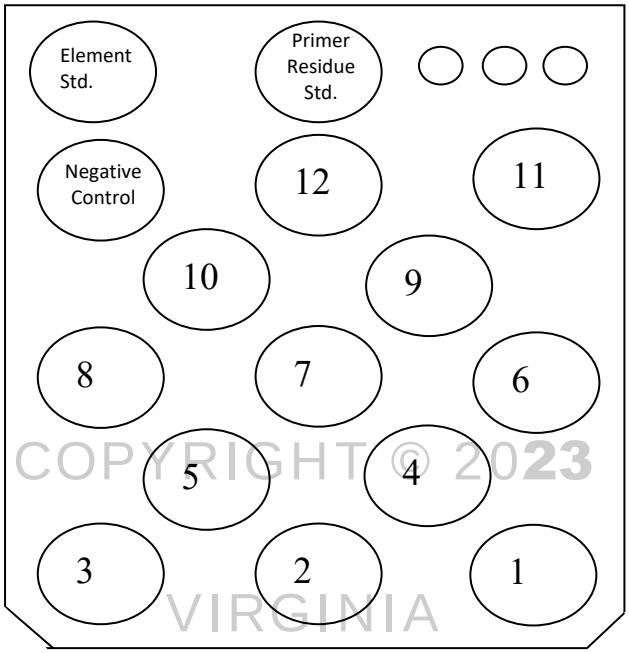

COPYRIGHT © 2023 VIRGINIA DEPARTMENT OF FORENSIC SCIENCE

10.3.4.3.2 ASPEX VP2000 Stage Map

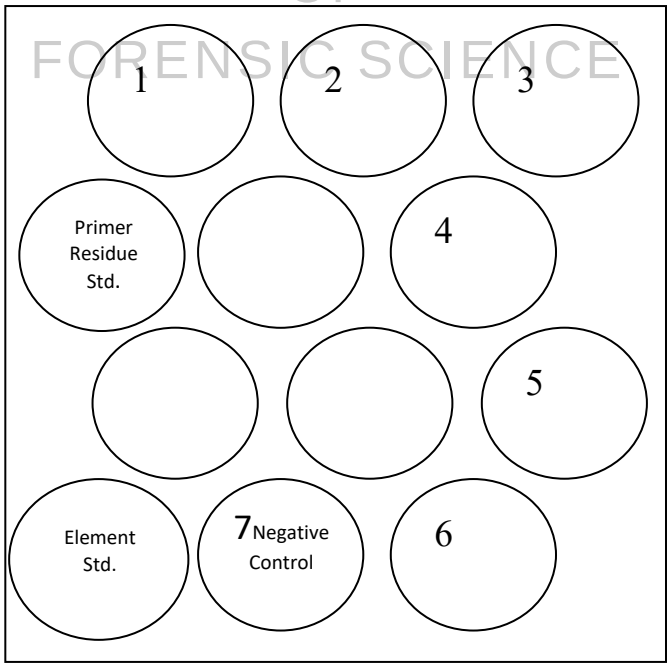

10.3.4.4 The SEM is pumped down to operational vacuum.

10.3.4.5 The filament is saturated at 20 KV when using the ASPEX VP2000 instrument and at 25 KV when using the ASPEX Explorer instrument. The filament is allowed to stabilize up to one hour.

UNCONTROLLED COPY

10.3.4.6 When using the ASPEX VP2000 instrument the beam is placed on a copper standard and the spot size adjusted to achieve approximately 1,500 CPS with a process time of 25.6 µsec at 20KV. A spectrum from 0 to 10.24 KeV is collected and calibrated using the EDS detector calibration software. When using the ASPEX Explorer instrument the beam is placed on a copper standard and the spot size adjusted to achieve approximately 30,000 CPS with a process time of 3.2 µsec at 25KV. A spectrum from 0 to 10.24 KeV is collected and calibrated using the EDS detector calibration software.

10.3.4.7 The backscatter electron detector is set to detect particles approximately 1 micron or greater in diameter in the following manner: After the objective lens is degaussed using the beam blank function at 1000X in an area where beam damage will be minimized, the stage is driven to the QA field on the primer residue positive control sample. An area is located where particles in the 1micron size range are visible at 1000X in the right hand image. This image is focused and stigmated using the mini imaging and medium scan speed mode. Imaging is then switched to normal and high scan speed.

10.3.4.8 The objective lens is degaussed at 1000X and each sample to be run is then checked using a three point focus system through the stage setup program. It is imperative that the sample coordinate positions are defined in exactly the same order as listed on the primer residue setup sheet. Areas of the stub where the aluminum surface is exposed should be avoided.

10.3.4.9 The magnification is returned to 100X. The area containing the particles in the 1 micron size range on the primer residue control sample is focused as described in Step 10.3.4.7. If setting up a new .afa file, the quality check is reviewed and set to check copper before the first, after the last and between every sample.

10.3.4.10 The backscatter detector thresholds are set to detect particles in the 1 micron size range. Typically, this involves low brightness and high contrast settings.

10.3.4.11 The automated run is started. Data is stored in the next sequential run file.

10.3.4.12 The ENFSI proficiency sample map and the primer residue control sample field is monitored to ensure particles in the 1micron size range are being detected. If they are not, the backscatter image and/or focus must be readjusted.

10.3.4.13 The Primer Residue Worksheet SEM/EDS is completed listing the SEM-EDS operating conditions used in the automated run.

10.3.4.14 Each sample surface is searched until 10 potential particles characteristic of primer residue are found or until the entire predesignated area is searched or 10,000 particles have been analyzed.

10.3.4.15 When the automated run is finished (typically the following day) a calibration is done on copper to check the EDS detector at 20KV, as described in 10.3.4.6, for the ASPEX VP 2000 instrument. The ASPEX Explorer instrument is calibrated at 25KV as described in 10.3.4.6.

10.3.4.16 The operator performs a manual confirmation at 20KV of the potential primer residue particles detected during the automated run on the ASPEX VP2000 instrument. The manual review on the ASPEX Explorer instrument is conducted at 25 KV.

10.3.5 References

10.3.5.1 Andrasko, J. and Maehly, A. C., "Detection of Gunshot Residue by Use of the Scanning Electron Microscope," Journal of Forensic Sciences, Vol. 22, 1977, pp. 279-287.

10.3.5.2 ASTM E 1588 Standard Guide for Gunshot Residue Analysis by Scanning Electron Microscopy/Energy Dispersive Spectroscopy.

COPYRIGHT © 2023 VIRGINIA DEPARTMENT OF FORENSIC SCIENCE

UNCONTROLLED COPY

10.3.5.3 Basu, S., "Formation of Gunshot Residues," Journal of Forensic Sciences, Vol. 27, 1982, pp. 72-91.

10.3.5.4 DeGaetano, D. H., Siegel, J. A., and Klomparens, K. L., "A Comparison of Three Techniques Developed for Sampling and Analysis of Gunshot Residue by Scanning Electron Microscopy and Energy Dispersive X-Ray Analysis," Journal of Forensic Sciences, Vol. 37, 1992, pp. 281-300.

10.3.5.5 Garofano, L., Capra, M., Ferrari, F., Bizzaro, G. P., DiTullio, D., Dell'Olio, M., and Ghitti, A., "Gunshot Residue Further Studies on Particles of Environmental and Occupational Origin," Forensic Science International, Vol 103, 1999, pp. 1 – 21.

10.3.5.6 Mosher, P. V., McVicar M. J., Randall E. D., and Sild, E. H. "Gunshot Residue-Similar Particles Produced by Fireworks", Canadian Society of Forensic Science Journal, Vol. 31 (2) 1998, pp. 157-168.

10.3.5.7 Nesbitt, R. S., Wessel, J. E., and Jones, P. F., "Detection of Gunshot Residue by Use of the Scanning Electron Microscope," Journal of Forensic Sciences, Vol. 21, 1976, pp. 595-610.

10.3.5.8 Sild, E. H. and Pausak, S., "Forensic Applications of SEM/EDX," Scanning Electron Microscopy, Vol. 2, 1979.

10.3.5.9 Wolten, G.M., Nesbitt, R.S., Calloway, A.R., Loper, G.L. and Jones, P.F., "Final Report on Particle Analysis for Gunshot Residue Detection," Report ATR-77(7915)-3. The Aerospace Corp., Sept. 1977.

10.3.5.10 Wright, D., and Trimpe, M., "Summary of the FBI Laboratory's Gunshot Residue Symposium May 31- June 3, 2005", Forensic Science Communications, Vol. 8, (3) 2006.

10.3.5.11 Gunshot Residue V2.00 from 1.12 Documentation, Operator's Manual. R. J. Lee Instruments Limited. 515 Pleasant Valley Rd., Trafford, PA 15085.

10.3.5.12 Guide for Primer Gunshot Residue Analysis by Scanning Electron Microscopy/Energy Dispersive X-Ray. https://www.swggsr.org/publications.

COPYRIGHT © 2023
VIRGINIA
DEPARTMENT
OF
FORENSIC SCIENCE

10.4 Documentation

10.4.1 Elements detected as potential primer residue particles and the diameter of the particles are documented on the Particle Summary Report. This report is generated by the operator after reviewing the electronic images and spectra of potential primer residue particles captured by the instrument during the automated analysis. Whenever possible, 10 potential particles characteristic of and/or consistent with primer residue are selected for manual review.

10.4.1.1 Particle classifications on the Particle Summary Report are preliminary due to the short X-ray acquisition times during the automated run. The operator will indicate the actual particle classification on the Particle Summary Report after performing the manual review. Particles that are confirmed as characteristic of or consistent with primer residue are indicated with a check mark.

10.4.1.2 Additions or corrections to the Particle Summary Report are made by the examiner at the time of the manual review.

10.4.1.3 Any changes not made at the time of the manual review must be initialed and dated at the time of the change.

UNCONTROLLED
COPY

10.4.1.4 If characteristic particles are found, the examiner must check the Copper classification for Copper/Cobalt particles. Any particles of this type that are spherical or molten in appearance shall be noted and a representative particle must be documented. If numerous particles of Zirconium are found that have a spherical or molten appearance they shall be noted and a representative particle must be documented. The examiner must then contact the Investigating Officer to determine if an automobile crash occurred in which the airbags deployed. If so, the examiner shall request that the passenger side deployed airbag, or a sample from the interior of the airbag taken with a DFS primer residue sampling device, be submitted for examination. The examiner shall also inform the Officer that there are additional potential Trace Evidence exams related to automobile crashes and direct them to the appropriate Laboratory personnel for further information.

10.4.1.5 In the case where no particles characteristic or consistent with primer residue are found, the examiner shall check the following element classifications:

10.4.1.5.1 Strontium – If spherical particles of Strontium or Strontium with Aluminum are found, this type of particle shall be documented and a cartridge case comparison shall be requested, prior to the firearms examination, if available.

10.4.1.5.2 Sintox – If spherical particles containing Titanium and Zinc are found, this type of particle shall be documented and a cartridge case comparison shall be requested, prior to the firearms examination, if available.

10.4.1.5.3 Bismuth - If spherical particles containing Bismuth are found, this type of particle shall be documented and a cartridge case comparison shall be requested, prior to the firearms examination, if available.

10.4.1.5.4 Antimony - If spherical particles containing Antimony with Potassium and Chlorine are found, then the Mercury class shall also be checked. These types of particles shall be documented and a cartridge case comparison shall be requested, prior to the firearms examination, if available.

10.4.1.5.5 If spherical or molten particles in the above categories are found but the ammunition is not known or no cartridge case is available for comparison, they will not be reported as consistent with GSR.

10.4.2 The original Primer Residue SEM/EDS Worksheet will be retained in the case file associated with the 1st case sample in the automated run.

10.4.3 A representative photograph and corresponding EDS spectrum for each confirmed primer residue particle is generated for the case file. EDS spectra should be obtained at a minimum of 1K counts full scale or 99 seconds Live Time whenever possible.

10.4.4 Confirmed particles from the representative particles are saved to the hard drive.

10.4.5 The Primer Residue Evidence Handling Worksheet is used to provide documentation for the results reported in the Certificate of Analysis. "Boiler plate" wording on the Worksheet that is not applicable may be struck through with a single line and the entire paragraph bracketed and initialed by the examiner.

10.4.6 The QA output must include a copy of the ENFSI proficiency sample map or positive control field before and after the case file sample(s). A copy of the negative control must also be included in the QA binder.

10.4.7 An Analysis Summary Report for each of the case samples analyzed is also included in the case file.

10.4.8 The PRIMER RESIDUE ANALYSIS INFORMATION FORM that is provided in the Primer Residue kit is retained in the case file.

COPYRIGHT © 2023 VIRGINIA DEPARTMENT OF FORENSIC SCIENCE

UNCONTROLLED COPY

10.4.9 The outside of the Primer Residue kit is photocopied and retained in the case file.

10.4.10 If the PRIMER RESIDUE ANALYSIS INFORMATION FORM indicates that the amount of time between the shooting event and the sampling for a living individual is in excess of 8 hours the samples will not be analyzed unless extenuating circumstances exist.

10.5 Cartridge Case Residue Examination

10.5.1 Purpose

10.5.1.1 Occasionally potential primer residue particles may be encountered that have an unusual elemental composition that may be consistent with a particular type of ammunition or of a non-firearms source. In such cases it is advisable to compare cartridge case residue to particles found on the hands for elemental consistency. Because cartridge cases are frequently heavily loaded with primer residue, special precautions must be taken for this type of exam. The overall examination is described below and is similar to the examination described in Sections 10.3 and 10.4 with the following notable exceptions.

COPYRIGHT © 2023

10.5.2 Minimum Standards and Controls

10.5.2.1 Collection of residue should be done by the TE Section before the FX Section analyzes the cartridge cases.

VIRGINIA DEPARTMENT OF FORENSIC SCIENCE

10.5.2.2 Evidence is opened on a cleaned, paper covered lab bench outside of the SEM room.

10.5.2.3 Gloves are worn and changed between cartridge cases.

10.5.3 Analytical Procedures

10.5.3.1 The headstamp information is documented.

10.5.3.2 A bamboo skewer cleaned with methanol is used to scrape the inner sides of the cartridge case and primer cup.

10.5.3.3 The type of primer used, Boxer (one flash hole) or Berdan (two flash holes) is documented.

10.5.3.4 The cartridge case is inverted and tapped over top of an unused sampling device with protective covering removed.

10.5.3.5 Using fine forceps, the protective covering is replaced over the residue pressing it into the tape surface. The protective covering is then removed and discarded.

10.5.3.6 The sampling device is inverted and tapped over a trash can to remove any remaining loose particles.

10.5.3.7 The sampling device is labeled.

10.5.3.8 The cartridge case residue is examined in the ASPEX VP 2000 using a “Cartridge case” .afa and rule file appropriate for the number of cartridge case samples being examined. The ENFSI proficiency sample is not required; the positive control sample is sufficient. The automated examination is programmed to stop after 1000 particles have been examined on each sample. Cartridge case residue samples from only one FS lab # are run at one time.

10.5.3.9 Follow 10.4.1-10.4.7 for documentation.

UNCONTROLLED COPY

10.5.3.9.1 10 representative particles with their corresponding photos and spectra are saved for each type/manufacturer of primer encountered.

10.5.3.9.2 A copy of the negative control is not included in the case file or QA binder as indicated in 10.4.6, as one is not necessary for cartridge case examination.

10.5.3.10 After the manual review is complete the samples are removed from the sample chamber and the sample chamber is detached from the SEM.

10.5.3.11 The sample chamber is thoroughly cleaned in a hood.

10.5.3.12 A "clean chamber check" negative control sample is examined in the ASPEX VP 2000 using a "clean chamber check" .afa and rule file. A copy of the "clean chamber check" data will be included in the QA binder. The Primer Residue Worksheet SEM/EDS for the clean chamber check is kept in the FS lab# file associated with the cartridge cases examined.

10.6 Inanimate Objects Examination

COPYRIGHT © 2023

10.6.1 Purpose

Unlike the collection of primer residue from the hands of living individuals, it is not possible to estimate when the primer residue was deposited on an inanimate object. For this reason, primer residue kits from inanimate objects will not be routinely accepted. Appropriate sampling of inanimate objects is important to ensure confidence in the results as well as prevent contamination of other surfaces.

VIRGINIA DEPARTMENT OF FORENSIC SCIENCE

10.6.2 Minimum Standards and Controls

10.6.2.1 Sampling of inanimate objects will take place outside the SEM room.

10.6.2.2 Areas used for sampling inanimate objects will be cleaned before use and surfaces covered with clean butcher paper.

10.6.2.3 Before opening any evidence container, an air blank consisting of an unused primer residue sampling device, will be opened and placed in the work area.

10.6.3 Analytical Procedures

10.6.3.1 Inanimate objects (e.g. clothing) submitted for primer residue testing shall first be evaluated as to suitability. Items that are suitable generally have a low potential to shed fibers or other debris that will interfere with SEM-EDS analysis.

10.6.3.2 If the item is deemed suitable for sampling, the air blank will be run with the samples collected.

10.6.3.3 If the item is deemed unsuitable for sampling the air blank will be returned, unanalyzed, with the evidence.

10.6.3.4 All samples collected from an item, and any air blank used, will be returned with the respective item.

10.7 Report Wording

10.7.1 Methods: Techniques utilized in the analysis shall be listed on the report.

Item _____ was examined using Scanning Electron Microscopy-Energy Dispersive X-Ray Spectrometry (SEM-EDS).

UNCONTROLLED COPY

10.7.2 Results for Primer Residue Kit / Inanimate Object Samples:

10.7.2.1 The number of confirmed primer residue particles and their type (e.g., characteristic, consistent) will be included in the report along with the maximum number of confirmed particles possible. The following should appear at the end of each positive result paragraph, regardless of how many Items were examined:

It should be noted, no more than 10 particles are confirmed per sample during examination.

10.7.2.2 Definitions:

Particles characteristic of primer residue are those that have a spherical or molten appearance (noncrystalline) and contain the elements lead, barium and antimony. Although rare, there are sources other than the discharge of a firearm that are capable of forming particles of this type.

Particles consistent with primer residue have the same appearance and typically include two of the three elements listed above. This type of particle is commonly associated with the discharge of a firearm but could also originate from numerous non-firearm sources.

COPYRIGHT © 2023

10.7.2.3 Negative:

10.7.2.3.1 No primer residue particles were found in the areas examined on the sample(s) in Item _____ marked right/left hand.

VIRGINIA DEPARTMENT OF FORENSIC SCIENCE

The absence of primer residue on the hands is consistent with an individual not having fired a weapon. A negative result could also occur from circumstances such as: washing the hands, wiping the hands, wearing gloves, sweating profusely, environmental factors including wind and rain, bloody hands, excessive debris on the sample, greater than 4 to 6 hours passing between firing and sampling, or the weapon not producing primer residue on the hands when discharged.

10.7.2.3.2 No primer residue particles were found in the areas examined on the sample(s) collected from Item ____.

The absence of primer residue is consistent with an object not coming into contact with primer residue or not being in proximity to a firearm during discharge. A negative result could also occur if primer residue was not deposited, not detected, or removed prior to sampling.

10.7.2.4 Positive:

10.7.2.4.1 (# of particles) particles characteristic of primer residue and/or (# of particles) consistent with primer residue were found in the areas examined on the sample(s) in Item _____ marked right/left hand. It should be noted, no more than 10 particles are confirmed per sample during examination.

Primer residue can be deposited on the hands by circumstances such as: firing a weapon, handling a weapon, being in proximity to the discharge of a weapon or coming into contact with an object that has primer residue on it. The number of confirmed particles cannot be used to determine which of these scenarios actually occurred.

10.7.2.4.2 (# of particles) particles characteristic of primer residue were found in the areas examined on the sample(s) in Item _____ marked inanimate object1/inanimate object 2. It should be noted, no more than 10 particles are confirmed per sample during examination.

UNCONTROLLED COPY

Primer residue can be deposited on the surface of an inanimate object by circumstances such as: the object being in proximity to the discharge of a weapon or coming into contact with another object that has primer residue on it. The number of confirmed particles cannot be used to determine which of these scenarios actually occurred.

10.7.2.5 Inconclusive:

Five (5) particles containing lead, barium, and antimony were found in the area examined on the sample in Item 3 marked right hand. However, a large number of zirconium particles were also found on the sample in Item 3 marked right hand. The presence of a large number of zirconium particles along with particles containing lead, barium, and antimony can be indicative of residue from a passenger side hybrid type airbag. Therefore, primer residue findings from the sample in Item 3 marked right hand are inconclusive.

If expended cartridge cases are recovered related to this case, please resubmit Item 3 with the cartridge cases for comparison.

If the passenger side airbag deployed in a vehicle related to this case, and is available for sampling, please resubmit Item 3 along with a sample from the interior of the airbag for comparison.

COPYRIGHT © 2023
VIRGINIA
DEPARTMENT
OF
FORENSIC SCIENCE

10.7.2.6 Additional statements for use as necessary:

10.7.2.6.1 It was indicated on the Primer Residue Analysis Information Form that the amount of time between the shooting event and the sampling for Item _____ was approximately _____ hours and _____minutes. Item _____ was not analyzed. It should be noted that the optimal window of opportunity for sampling the hands of a living individual lasts for up to 4 to 6 hours after the shooting event.

10.7.2.6.2 The sample in Item _____ marked right/left hand was not necessary for examination.

10.7.2.6.3 Item ___ was examined visually and found not to be suitable for Primer Residue sampling due to (state the reason, e.g., garment construction).

10.7.3 For Cartridge Case Residues

10.7.3.1 Report the type of particles found on the samples and the unusual elements observed. Compare and contrast them with the type of residue found in the spent cartridge case(s) or airbags associated with the case.

10.7.3.1.1 Example of an alleged .22 caliber shooting case:

METHODS:

The samples in Item _____ and residues collected from Items _____were examined using Scanning Electron Microscopy-Energy Dispersive X-Ray Spectrometry (SEM-EDS).

RESULTS & INTERPRETATIONS:

Particles characteristic of primer residue are those that have a spherical or molten appearance (noncrystalline) and contain the elements lead, barium and

UNCONTROLLED
COPY

antimony. Although rare, there are sources other than the discharge of a firearm that are capable of forming particles of this type.

Particles consistent with primer residue have the same appearance and typically include two of the three elements listed above. This type of particle is commonly associated with the discharge of a firearm but could also originate from numerous non-firearm sources.

Nine (9) particles characteristic of primer residue were found in the area examined on the sample in Item _____ marked right hand. It should be noted that one (1) of the particles characteristic of primer residue found in the area examined on the sample in Item _____ marked right hand contained tin. Six (6) particles characteristic of primer residue were found in the area examined on the sample in Item ____ marked left hand. One (1) particle consistent with primer residue containing lead and barium was found in the area examined on the sample in Item _____ marked left hand. In addition, three (3) particles consistent with primer residue containing barium and aluminum were found in the area examined on the sample in Item _____ marked left hand. It should be noted, no more than 10 particles are confirmed per sample during examination.

COPYRIGHT © 2023

Particles consistent with primer residue containing lead and barium were found in the residues collected from the Item _____ cartridge cases.

VIRGINIA

The majority of the primer residue population from the samples in Item _____ marked right hand and left hand was inconsistent with the primer residue composition found in the residues collected from the Item _____ cartridge cases.

DEPARTMENT OF FORENSIC SCIENCE

Primer residue can be deposited on the hands by circumstances such as: firing a weapon, handling a weapon, being in proximity to the discharge of a weapon or coming into contact with an object that has primer residue on it. The number of confirmed particles cannot be used to determine which of these scenarios actually occurred.

UNCONTROLLED COPY

11 LAMP FILAMENTS

11.1 Introduction

The primary purpose of a lamp filament analysis is to determine whether the lamp was lighted or unlighted at the moment of impact. Fortunately, the filaments of incandescent lamps often give the key to answering the question. The stresses generated on a filament by the accelerations and sudden stops of a collision produce deformation and fracture phenomena with characteristic differences between hot and cold filaments. Further evidence may arise if the glass bulb is broken during the accident. If the filament is hot, it will be oxidized and it may melt any broken glass that comes in contact with it.

11.1.1 The investigator may be able to provide information useful to the examination such as:

- All lamps located in the damaged area of the vehicle
- Accident reports and photographs depicting the damaged area(s) of the vehicle(s)
- The socket position on the vehicle from which the lamp is removed and the function of the lamp.

COPYRIGHT © 2023

11.1.2 Lamps should be identified with a unique item number. Lamps should be described as to the type of lamp and, whenever possible, specify the specific location on the vehicle from which it was obtained. The terms “passenger” and “driver” side provide a clearer description than “right” and “left” side of the vehicle.

VIRGINIA

Example: #1 head lamp – passenger side, outside lamp
#2 parking lamp – driver side

DEPARTMENT

11.1.3 Lamp examinations can also be conducted on other types of vehicles and objects. Bicycles, farm tractors, caution signs, traffic lights and the like may yield evidence helpful to an investigation. Any lamp having a tungsten filament, which has been involved in a collision or has been impacted, may yield some helpful information; however, there may not always be sufficient information to make a definitive conclusion.

OF
FORENSIC SCIENCE

11.2 Safety Considerations

Examiner should:

- Use caution in examining lamps and testing circuits.
- Never look with the naked eye directly into a lamp which is lighted. Caution should be used as the light emitted during white heat can injure the eyes.
- Ordinary sunglasses are not dark enough. Use a piece of exposed film.
- Broken bulbs have very sharp edges and can produce severe cuts.
- Electrical circuits may be energized and could produce electrical shocks.

11.3 Equipment

- Stereomicroscope
- Comparison microscope
- Photographic equipment
- Charcoal starter
- Scribe
- A volt-ohm meter (multimeter) to measure resistance of the wire
- Batteries or a 6 and/or 12 volt battery charger for testing reference lamps and/or for experimentation
- Hand tools
- Other equipment as needed

11.4 Minimum Standards and Controls

UNCONTROLLED
COPY

Known lamp standards may be used for comparisons. These lamps may be purchased from any retail lamp distributor.

All reported vehicle lamp conclusions will be verified by an examiner qualified to perform technical review of the case file who will conduct the verification from the original evidence. The examiner must view the lamps microscopically as part of the verification. The examiner's case file notes will be initialed and dated by the second examiner who will include a notation to indicate that the vehicle lamp conclusion was verified.

11.5 Procedure

11.5.1 The evidence will be marked in accordance with the QM. A systematic approach should be used for the vehicle lamp examination, with findings and observations recorded in the notes.

11.5.2 General Lamp Examination Procedure

11.5.2.1 Classify lamp as to the brand, type, base arrangement, electrical rating (voltage/wattage), and purpose in vehicle, if possible.

COPYRIGHT © 2023

11.5.2.2 Document the physical appearance of the lamp through photographs or sketches and notes, to include the following:

- physical condition of the glass (breakage/discoloration).
- physical condition of the base (type of metal, markings present).
- physical appearance of the filament(s) to include the amount of distortion/stretching
- presence or absence of any discoloration of the metal, oxide deposits
- presence or absence of age sag, pitting of the metal
- presence of cold fracture
- presence of molten or melted glass
- any other physical phenomena observed

VIRGINIA DEPARTMENT OF FORENSIC SCIENCE

11.5.2.3 It may be necessary to open the lamp, as described in ¶ 11.5.3 or 11.5.4.

11.5.2.4 Prior to using the volt-ohmmeter, verify proper operation by placing the volt-ohmmeter in the resistance mode to measure continuity. Touch probes together and verify a reading of "0". If the volt-ohmmeter reads "0" it may be used to test for continuity in lamp filaments. Document in case notes that the volt-ohmmeter is functioning properly.

11.5.2.5 If observations are inconsistent, it may be advantageous to use comparison lamps to show similarities in lamp configurations and conduct experiments to simulate characteristics observed in the evidence.

11.5.3 Small Lamp Examination Procedure

Opening small lamps is a relatively simple procedure, but care must be used with broken glass. Continuity testing with a volt-ohm meter shall be conducted before opening any lamps.

11.5.3.1 Wear protective eye coverings

11.5.3.2 Using a scribe, etch the bulb to stress the glass.

11.5.3.3 Place a piece of plastic wrap around the glass.

11.5.3.4 Place the lamp bulb right side up in the jaws of a vise, while holding onto the base of the lamp.

UNCONTROLLED COPY

11.5.3.5 Slowly and gradually close the vise jaws on the glass bulb until the pressure exerted on the glass causes it to break.

11.5.3.6 Carefully remove the lamp from the vise.

11.5.3.7 Turn the lamp upside down over a piece of paper to catch any material that has fallen into the base.

11.5.3.8 Remove any sharp edges of glass with a pair of pliers.

11.5.3.9 Compare the current condition of the filament to how it appeared prior to opening the lamp.

11.5.3.10 An alternate method of opening a small lamp may be utilized using a glass tube cutter. Care must be taken to reduce the possibility of damaging the filaments and internal lamp parts.

11.5.3.11 Record the method of opening, findings and observations in the notes by documenting and/or photographing.

COPYRIGHT © 2023

11.5.4 Sealed Beam Lamp Examination Procedure

The following method has been used successfully for opening sealed beam lamps, and is preferred over tapping methods as it reduces the possibility of damaging the filaments.

VIRGINIA DEPARTMENT OF FORENSIC SCIENCE

11.5.4.1 Using a carbide scribe, make a score mark around the lugs on the reflector in a circular pattern. It is helpful to use a circular pattern that coincides with the charcoal starter's radius.

11.5.4.2 Hold the hot charcoal starter loop on the scored circle.

11.5.4.3 A drop of water may be placed where the reflector and the charcoal starter meet. The reflector should crack along the scored line with a distinct click.

11.5.4.4 Rotate the lamp slowly to continue the crack around the scored line.

11.5.4.5 Once the crack has gone completely around the reflector, remove the heat.

11.5.4.6 Grasp a lug with pliers and tap the reflector on the scored, cracked line with a small hammer or pliers to separate the part of the reflector attached to the filaments from the lens.

11.6 Interpretation of Results and Reporting

All interpretations of results to include lamp description, observations and conclusions shall be recorded in the notes.

11.6.1 Description of the lamp: This gives information about the lamp as to its type and description. It may also offer the position of the lamp as it was in the vehicle.

11.6.2 Methods: Techniques utilized in the examination shall be listed on the report.

11.6.2.1 Item _____ was examined visually and using stereomicroscopy and compound microscopy.

11.6.2.2 Item _____ was examined using a multimeter, stereomicroscopy, compound microscopy, and Scanning Electron Microscopy-Energy Dispersive X-Ray Spectrometry (SEM-EDS).

11.6.3 Observations: In the body of the "Certificate of Analysis" under the "Results & Interpretations" heading, the appearance of the lamp, the functionality of the filament(s) and both normal and abnormal characteristics are reported

UNCONTROLLED COPY

11.6.3.1 Items ___ and ___ are dual filament, dual purpose lamps. Generally, when used in the rear of a vehicle, one filament serves as the taillight and the other filament serves as the brake, turn indicator, and/or hazardous warning signal.

Examination of Item ___ revealed the glass envelope to be intact and the filaments to be operational. The physical appearance of each filament was considered normal.

Examination of Item ___ revealed the glass envelope to be intact and slightly darkened due to age. The filaments were operational and exhibited stretching and distortion.

11.6.3.2 The Item ___ type 3457AK lamp is a dual filament, dual purpose lamp with operational filaments. Generally, when this lamp is used in the front of the vehicle, one filament serves as the parking light and the other filament serves as the front turn signal. The parking light filament exhibited significant distortion and stretching. The turn signal filament was considered normal in appearance.

11.6.3.3 Item ___ contained a damaged portion of a sealed beam headlamp. The Item ___ lamp is a dual filament, dual purpose lamp. Generally, when this lamp is used in the front of the vehicle, one filament serves as the low beam and the other filament serves as the high beam.

The Item ___ glass envelope was broken and missing with only pieces of the reflector remaining. The support posts were bent and damaged, therefore, the filaments are not in normal operating condition. The low beam filament was distorted, mechanically stretched, and discolored with molten and adhering glass. The low beam filament was fractured with tapered and/or rounded ends in two locations. The high beam filament was separated from the support posts and was flattened, blackened, and fractured.

11.6.3.4 Item ____ consisted of a [light-emitting diode (LED) / high-intensity discharge (HID)] lamp. [LED / HID] lamps do not contain filaments and therefore are not suitable for on/off determination.

11.6.3.5 When a filament is continuous, but envelope conditions would cause burnout:

Examination of the [Item#] lamp revealed it to be capable of conducting electrical current; however, the lamp is not operational due to the condition of its envelope.

11.6.4 Conclusions: Additionally, in the “Results” section of the report, the conclusions, based on the observations reported, are stated.

11.6.4.1 Examination of the [Item#] lamp revealed physical characteristics consistent with it having been lighted when it was subjected to impact shock and the glass envelope was broken (damaged). See Criterion I

11.6.4.2 Examination of the [Item#] lamp revealed physical characteristics consistent with it having been lighted when it was subjected to impact shock (damaged). See Criterion II

11.6.4.3 Examination of the [Item#] lamp revealed physical characteristics consistent with it not having been lighted when it was subjected to impact shock (damaged). See Criterion III

11.6.4.4 Examination of the [Item#] lamp revealed insufficient distortion/stretching to definitively determine the “on” or “off” condition at the time of vehicle impact. (damaged). See Criterion IV

11.6.4.5 Examination of the [Item#] lamp revealed it to be normal, and therefore it was not possible to determine the “on” or “off” condition at the time of vehicle impact. (lamp is normal, with no apparent damage) See Criterion IV

COPYRIGHT © 2023
VIRGINIA
DEPARTMENT
OF
FORENSIC SCIENCE

UNCONTROLLED
COPY

11.6.4.6 General Criteria for Lamp Examination Conclusions

11.6.4.6.1 Criterion I: The bulb was "on"… (glass broken).

Physical characteristics would include an oxidized filament (discolored), possibly with beaded ends, some degree of filament distortion, possibly molten or welded glass on the filaments, possibly white tungsten oxides present on the inner surface of the bulb and/or on the colder surfaces within the bulb (posts, other filament); note that mechanical stretching may occur when glass is broken, so at least one of the other characteristics should be present to make this determination.

11.6.4.6.2 Criterion II: The bulb was “on”…(glass not broken).

Physical characteristics include some significant degree of distortion and/or stretching of one or both filaments.

COPYRIGHT © 2023

11.6.4.6.3 Criterion III: The bulb was not “on”…

The filament has been cold fractured or there is a normal burnout. The absence of physical characteristics that would be expected if a lamp was lighted at the time of impact and the glass envelope was broken (such as oxidation of the filament, melted glass, filament distortion) are an indication that the bulb was not lighted at the time that the glass was broken.

VIRGINIA DEPARTMENT OF FORENSIC SCIENCE

11.6.4.6.4 Criterion IV: Insufficient characteristics to determine the “on” or “off” condition.

The lamp appears normal, or there is insufficient distortion to make a determination.

11.7 Full Report Wording Examples

11.7.1 Example 1

Item 1	One (1) 1157 lamp
Item 2	One (1) 2057 lamp

METHODS:

Items 1 and 2 were examined visually and using stereomicroscopy, compound microscopy, and a multimeter.

RESULTS AND INTERPRETATIONS:

Items 1 and 2 are dual filament, dual purpose lamps. Generally, when used in the rear of a vehicle, one filament serves as the taillight and the other filament serves as the brake, turn indicator, and/or hazardous warning signal.

Examination of Items 1 and 2 revealed the glass envelopes were intact. The brake/turn/hazard filament in each lamp was operational. The taillight filament in Item 1 was operational but the taillight filament in Item 2 was not operational due to cold fracture. The taillight filaments exhibited slight distortion, however, less distortion than that exhibited by the brake/turn/hazard filaments.

The physical appearance of these lamps was consistent with the brake/turn/hazard filaments having been lighted and the taillight filaments not having been lighted when, at some time, these lamps were subjected to impact shock.

UNCONTROLLED COPY

11.7.2 Example 2

Item 1A	One (1) type 3057 dual filament tail lamp from right rear of vehicle
Item 1B	One (1) type 194 single filament marker lamp from right rear of vehicle
Item 1C	One (1) type 3057 dual filament backup lamp from right rear of vehicle
Item 1D	One (1) type 3057 dual filament tail lamp from left rear of vehicle

METHODS:

Items 1A, 1B, 1C, and 1D were examined visually and using compound microscopy.

RESULTS AND INTERPRETATIONS:

Examination of the above listed lamps revealed the following:

Item 1A – The glass envelope was intact and darkened due to age. Both the taillight filament and the brake/turn/hazard filament were operational. The taillight filament exhibited stretching and distortion. The brake/turn/hazard filament was considered normal in appearance. The physical appearance of Item 1A was consistent with the taillight having been lighted when, at some time, this lamp was subjected to impact shock. It was not possible to determine the "on" or "off" condition of the brake/turn filament at the time of vehicle impact.

COPYRIGHT © 2023
VIRGINIA
DEPARTMENT
OF
FORENSIC SCIENCE

Item 1B – The glass envelope was intact and darkened due to age. The filament was operational and exhibited stretching and distortion. The physical appearance of Item 1B was consistent with this lamp having been lighted when, at some time, it was subjected to impact shock.

Item 1C – The glass envelope was intact. Both filaments in this lamp were operational. The physical appearance of each filament was considered normal. It was therefore not possible to determine the "on" or "off" condition of this lamp at the time of vehicle impact.

Item 1D – The glass envelope was intact and darkened due to age. The taillight filament and the brake/turn/hazard filament were both operational. The taillight filament exhibited distortion which is consistent with it having been lighted when, at some time, this lamp was subjected to impact shock. The brake/turn/hazard filament exhibited some distortion which is indicative that this filament could have been lighted; however, the degree of the distortion was insufficient to definitively determine that this filament was lighted when, at some time, this lamp was subjected to impact shock.

11.7.3 Example 3

Item 6	One (1) type 1157 lamp
Item 7	One (1) type 1157 lamp

METHODS:

Items 6 and 7 were examined visually and using stereomicroscopy.

RESULTS AND INTERPRETATIONS:

Item 6 and 7 are Chinese manufactured type 1157 dual filament, dual purpose lamps. Generally, when used in the rear of the vehicle, one filament serves as the taillight and the other filament serves as a brake, turn indicator, and/or hazardous warning signal.

Examination of Item 6 revealed the glass envelope to be broken and, for the most part, missing. The filaments were not in normal operating condition. The support posts were damaged. The taillight filament exhibited stretching, distortion, oxidation, molten glass, fused glass, and a fracture. The brake/turn/hazard filament exhibited stretching, distortion, and mild oxidation.

UNCONTROLLED
COPY

Examination of Item 7 revealed the glass envelope to be intact and the filaments to be operational. The taillight filament exhibited stretching and distortion. The physical appearance of the brake/turn/hazard filament was considered normal.

The physical characteristics of Items 6 and 7 taken together was consistent with the taillights having been lighted and the brake/turn/hazard filaments not having been lighted when, at some time, these lamps were subjected to impact shock and the glass envelope of Item 6 was broken. The Item 6 taillight filament was subsequently fractured.

11.8 References

11.8.1 Badger, Joseph E., "Casting New Light On Lamp Investigation," Law Enforcement Technology, September, 1989, pp. 38-39, 53.

11.8.2 Baker, J.S., Aycock, T.L., and Lindquist, T., Lamp Examination for On or Off in Traffic Accidents, The Northwestern University Traffic Institute, 1995.

11.8.3 Biglio, L., Kubicki, B., and Codella P., FT-IR Diagnostics of Tungsten-Halogen Lamps: Role of Halogen Concentration, Phosphorus, Wall Material, and Burning Environment," Applied Spectroscopy, Vol. 45, No, 5, 1991, pp. 819 –833.

11.8.4 Bleyl, Robert L., "Who Had the Green Signal?", Journal of Police Science and Administration, Vol. 8, No. 4, Dec., 1980, pp. 437-439.

11.8.5 Coldwell, B.B. and Melski, T.B., "Motor Vehicle Lights as Evidence in Traffic Accident Investigations," R.C.M.P. Gazette, May 1961, pp. 2-8.

11.8.6 Moseley, Alfred L., "Use of Lamp Filaments in Collision Analysis," in Research on Fatal Highway Collisions, Papers 1962 – 1963, Harvard Medical School, pp. 187-195.

11.8.7 Murphy, K.J., Rioux, J.M., Stone, H.S. Stone, and A.W. Stuart, "Determination of the Temperature of the Filament Adjacent to the Incandescent Filament in a Double Beam Headlight," Can. Soc. Forensic. Sci. J., Vol. 24, No. 2, 1991, pp. 91-96.

11.8.8 Rivers, R.W. and Hochgraf P.E., Traffic Accident Investigators' Lamp Analysis Manual, Charles C. Thomas Publisher, Ltd. (Springfield), 2001.

11.8.9 Saferstein, R., Forensic Science Handbook, Chapter 4, "Forensic Glass Comparisons", pp. 139-182, 1982.

11.8.10 Slavin, James M., "Weaknesses in Traffic Accident Investigation," FBI Law Enforcement Bulletin, Feb. 1968, pp. 2-6, 17-20.

11.8.11 Stauffer, Eric., M.S., "Interpretation of Automotive Light Bulb Examination Results: An Intriguing Case," J. Forensic Sci, January 2007, Vol. 52, No.1, 119-124.

11.8.12 Thompson, J.W., "Switched On?", Journal of Forensic Science Society, Vol. II, No. 3, July, 1971, pp. 151-152.

11.8.13 Tobin, William A., "Noninvasive Evaluation of Vehicular Lamp Bulbs," Crime Laboratory Digest, Volume 21, No. 1, January 1994, pp. 5-7.

11.8.14 Traffic Collision Investigation. "Chapter 7 - Lamp Examination for 'On' or 'Off' in Vehicle Collisions," 2001 Northwestern University Center for Public Safety, Evanston, IL, pp. 301-365.

COPYRIGHT © 2023
VIRGINIA DEPARTMENT OF FORENSIC SCIENCE

UNCONTROLLED COPY

12 FOURIER TRANSFORM INFRARED SPECTROPHOTOMETER (FTIR)

12.1 Overview

The QC checks will be performed prior to using the instrument and any accessories for casework. A sample log will be maintained that includes at a minimum the date, the initials of the examiner, the FS Lab# or other identifying information and the method of analysis: Bench, Microscope or ATR. Data files will be backed up by copying them biannually to the Department's intranet and retained there for a period of no more than 2 years.

12.2 Bench QC

12.2.1 Day-of-Use

12.2.1.1 The bench shall be aligned using the "Align Bench" function. Place a checkmark in the respective column in the logbook to record when this is done. If the bench has previously been aligned during the given week, the bench does not need to be re-aligned.

COPYRIGHT © 2023

12.2.1.2 Run Val-Pro iS50 System Qualification Test, which checks several different performance characteristics including collecting polystyrene and NG11 glass spectra, checking the peak-to-peak noise using samples mounted on a wheel. This wheel shall be replaced prior to expiration of its calibration certificate or, when a certificate does not include a date of expiration, 5 years from the date of manufacturer's certification. If all tests do not pass, troubleshoot and re-run Val-Pro. Do not proceed until this issue is resolved. All copies of the Val-Pro report, including those with notations of "Fail", will be generated, initialed, and retained for 5 years. Record the date and initials of the person performing the test in the logbook.

VIRGINIA DEPARTMENT OF FORENSIC SCIENCE

12.3 Microscope Accessory QC

12.3.1 Day-of-Use

12.3.1.1 Bench QC procedures shall be performed prior to using this accessory.

12.3.1.2 All of the lights (transmittance, reflectance and aperture) will remain on and the detector will be cooled for a minimum of thirty minutes prior to conducting the QC checks. Insulated gloves and safety glasses shall be worn when filling the transport Dewar as well as the instrument reservoir.

12.3.1.3 The alignment of the optical path of the microscope shall be checked and corrected as necessary.

12.3.1.4 The noise level of the scope will be measured at the 2700-2600 cm^{-1} region of the spectrum with the following instrument parameters:

- Scans = 200
- Resolution = 4 cm^{-1}
- Gain = 1.0
- Optical velocity = 1.8988
- Aperture = 32

For the MCT-A detector, the Peak-to-Peak noise value should be < 0.041%T, if not, perform maintenance. The noise value will be recorded in the log book, along with the date and initials of the person performing the test.

12.3.1.5 A spectrum of the polystyrene test film will be taken with the following instrument parameters:

UNCONTROLLED COPY

- Scans = 128
- Resolution = 4 cm^{-1}
- Gain = 1.0
- Optical velocity = 1.8988
- Aperture = 32

The value of the 1601 cm^{-1} peak will be recorded in the log book, along with the date and initials of the person performing the test. If the value has changed ± 0.2 cm^{-1} from the most recent value obtained, then troubleshoot and re-analyze the polystyrene test film. Do not proceed until this issue is resolved. A copy of the polystyrene spectrum with wavenumbers displayed to two decimal places will be generated, initialed and retained for 5 years.

12.4 ATR Accessories

12.4.1 Integrated iS50 ATR and Golden Gate ATR Day-of-Use

12.4.1.1 Bench QC procedures shall be performed prior to using this accessory.

12.4.1.2 When the Golden Gate ATR accessory is used instead of the integrated iS50 ATR, it must be placed into the bench sample compartment, and the throughput checked by testing the Smart Accessory. The system must display a check mark to proceed.

12.4.1.3 Clean the diamond crystal and anvil surface before and after analysis.

12.4.1.4 A spectrum of the backing of a designated adhesive tape will be taken with the following ATR instrument parameters:

- Scans = 32
- Resolution = 4 cm^{-1}
- Gain = Autogain
- Optical velocity = 0.4747

Print the spectrum with no ATR correction with wavenumbers displayed to zero decimal places (units) and compare to that previously obtained with the accessory, looking at any significant changes to the %Reflectance, the position of the peaks and the resolution of peaks. If there is a significant change in the data, perform maintenance. The printed spectrum of the tape backing will be initialed and retained for 5 years.

12.4.2 Slide-on ATR Attachment (on Continuum's 15X Reflachromat objective) Day-of-Use

12.4.2.1 Bench and Microscope QC procedures shall be performed prior to using this accessory.

12.4.2.2 Clean the ATR crystal with care before analysis by rotating the nosepiece so the crystal is accessible. A Kimwipe may be used, along with water, methanol, ethanol, or isopropanol when necessary.

12.4.2.3 A spectrum of the pink polyethylene bag used to store the tip will be taken with the following ATR instrument parameters:

- Scans = 200
- Resolution = 4 cm^{-1}
- Gain = Auto
- Optical velocity = 1.8988
- Aperture = 32

COPYRIGHT © 2023
VIRGINIA DEPARTMENT OF FORENSIC SCIENCE

UNCONTROLLED COPY

Print the spectrum with no ATR correction with wavenumbers displayed to zero decimal places (units) and compare to that previously obtained with the accessory, looking at any significant changes to the %Reflectance, the position of the peaks and the resolution of peaks. If there is a significant change in the data, perform maintenance. The printed spectrum of the polyethylene bag will be initialed and retained.

12.5 Casework Analysis

12.5.1 Introduction

12.5.1.1 The spectra for samples are compared to other samples (K and Q) or to standards. The resolution of standard reference spectra will be equal to or better than the resolution of the sample spectra. Data will be displayed to zero decimal places (units).

12.5.1.2 If any meaningful differences are observed in the spectra of the questioned and known sample, the examiner may discontinue the analysis.

COPYRIGHT © 2023

12.5.1.3 A new background spectrum shall be collected either before or after every casework sample.

12.5.1.4 Data manipulation, including baseline correction, is discouraged and smoothing of data is prohibited. If baseline correction is conducted, a copy of the original, uncorrected spectrum will be included in the case file.

VIRGINIA DEPARTMENT OF FORENSIC SCIENCE

12.5.1.5 While the examiner must always carefully assess the sampling method selected and the data obtained, the examiner must be particularly cautious when using an ATR Accessory. ATR is a surface analysis technique and, as such, may not be suitable for all types of samples. Paint samples require particular attention as the surface spectrum may differ from the spectrum of the individual layer when using the microscope accessory.

12.5.1.5.1 For the iS50 integrated ATR and the Golden Gate ATR, it is important that the anvil not touch the crystal surface or interference bands from the anvil crystal will appear in the data. For this reason, many fibers do not have a large enough diameter to be analyzed via this method. Assess the %R and if it is poor, the sample, as analyzed, may not be covering a sufficient amount of the ATR crystal. If this is the case, either use more sample and re-analyze or select a different sampling method.

12.5.1.5.2 For the slide-on ATR objective, caution is of extreme importance as the germanium ATR crystal tip may be damaged if the stage is raised beyond a safe limit. Analysis via this method is not preferred, if other methods (e.g., use of the Continuum microscope or bench ATR) are possible.

12.5.1.6 Sample preparation techniques are dependent on the type of sample to be analyzed. The most frequently used sample preparation techniques are listed below.

12.5.2 Sample Preparation

12.5.2.1 Pellet Technique

12.5.2.1.1 Infrared grade KBr must be kept dry by storing it in a desiccator.

12.5.2.1.2 Infrared grade KBr and the sample each must be finely ground. The KBr and sample are mixed by grinding with a mortar and pestle in an approximate ratio of 100 parts KBr to 1 part sample.

12.5.2.1.3 The mixture is placed in a pellet press to prepare the pellet.

UNCONTROLLED COPY

12.5.2.1.4 Alternatively, a KBr-only pellet may be pressed or a commercially available KBr window may be used to place a drop of sample in solvent onto the KBr. The solvent is evaporated and the sample is analyzed as a thin film on KBr.

12.5.2.2 Microcompression Cell with Diamond Windows

12.5.2.2.1 Clean the diamond windows before and after analysis.

12.5.2.2.2 Place the sample between the windows and hand tighten the cell to compress the sample.

12.5.2.2.3 To decrease the interference fringes seen in the spectra, KBr or AgCl may be placed between the diamond windows, compressed with the sample and used to obtain the background spectrum. Alternatively, one window may be removed after compression and before analysis.

12.5.2.2.4 Ensure that the appropriate setting on the objective and/or condenser compensation ring(s) is used. After making adjustments to the compensation ring(s), it is important to check the optical path alignment as manipulation of the compensation ring(s) may shift the alignment.

COPYRIGHT © 2023

12.5.2.3 Benchtop ATR Accessory (iS50 integrated ATR and Golden Gate ATR)

VIRGINIA DEPARTMENT OF FORENSIC SCIENCE

12.5.2.3.1 Clean the diamond crystal and anvil surface before and after analysis.

12.5.2.3.2 For solid samples, cover the diamond portion of the crystal with sample. Press the anvil against the sample by turning the anvil screw clockwise until it spins without further tightening. Exercise caution during this maneuver as with some samples (e.g., polystyrene bead) the anvil screw may not spin freely and attempts to further tighten it may result in damage to the accessory.

12.5.2.3.3 For liquid samples, place a drop or two of liquid directly onto the ATR crystal using enough sample to cover the crystal completely. If the sample is volatile, place the cover over the sampling area to prevent evaporation during analysis. The anvil is not used during analysis.

12.5.2.3.4 If the sample requires an extraction, the sample in an organic solvent may be dropped onto the crystal and allowed to evaporate to form a film. The bridge is not lowered during analysis. An o-ring may be used to contain the liquid as it is placed on the crystal.

12.5.2.3.5 Samples are compared to other samples (K and Q) or to standards by comparing the raw ATR data of each. However, the ATR correction should be performed prior to searching libraries containing transmission spectra.

12.5.2.4 ATR slide-on attachment (on Continuum's 15X Reflachromat objective)

12.5.2.4.1 Carefully clean the ATR's germanium tip before analysis by rotating the nosepiece so the crystal is accessible. A Kimwipe may be used, along with water, methanol, ethanol, or isopropanol when necessary.

12.5.2.4.2 Remove the stage slide holder plate, and insert the Contact Alert plate in the stage slide holder. A glass microscope slide, with cellulose tape covering the bottom surface, shall be in the center. The Contact Alert plate has a pressure sensing system to indicate and monitor contact between the sample and ATR crystal. Ensure the green and red LED lights on the microscope base work properly by applying gentle pressure to the center of the slide with your finger.

UNCONTROLLED COPY

12.5.2.4.3 Insert the crystal slider into the slide-on ATR as the spring plunger is rotated and pulled out of the ring mount. Replace the glass slide with a sample slide. This slide shall also have cellulose tape covering the bottom surface, but is the mounting platform for the sample of interest. The tape will prevent glass pieces from dropping into the condenser if, when pressure is applied, the glass slide breaks.

12.5.2.4.4 With the microscope in reflection mode and the ATR crystal slider in "view" mode (ATR crystal out of optical path), focus and center the desired data collection area. Push in slider to be in ATR mode, and collect a background spectrum with the ATR out of contact with the sample.

12.5.2.4.5 For sample spectral collection, raise the sample stage slowly. Stop when the green LED lights. This means the sample has made contact with the ATR crystal. The spectrum may be collected either when the green LED light is illuminated, or just after the red LED lights.

COPYRIGHT © 2023

12.5.2.4.6 Samples are compared to other samples (Q and K) or to standards by comparing the raw ATR data of each. However, the ATR correction should be performed prior to searching libraries containing transmission spectra.

VIRGINIA DEPARTMENT OF FORENSIC SCIENCE

12.5.2.5 Reflectance

12.5.2.5.1 Clean the first order mirror slide before and after analysis.

12.5.2.5.2 Place the sample on the mirrored slide paying attention to which side is first-order.

12.5.2.5.3 Set the microscope to reflection mode by changing the sample compartment option from 'µScope %T' to 'µScope %R' within the Experiment Setup menu's Bench tab.

12.5.2.5.4 Change the Continuµm microscope mode to Reflection using the buttons on the base of the microscope.

12.5.2.5.5 Focus on the sample surface and collect the sample spectrum.

12.5.2.5.6 Move onto the mirror and collect the background spectrum.

12.5.2.6 Vapor Technique

Standard gas cells are used for vapor samples. Evacuate the gas cell, by pulling room air through, and obtain the background spectrum. Fill the gas cell and obtain the sample spectrum. "Clean" the gas cell by evacuating it following sample analysis.

12.6 Instrumental Conditions

12.6.1 The following instrumental conditions are used unless otherwise noted in the case file documentation.

Experiment	Bench	Scope	ATR
Detector:	DTGS	MCT-A	DTGS
Spectral range (cm^{-1}):	4000-400	4000-650	4000–400
Beam splitter:	KBr	KBr	KBr
Source:	IR	IR	IR
Gain:	Auto	Auto	Auto

UNCONTROLLED COPY

Optical velocity (max.):	0.4747	1.8988	0.4747
Aperture:	100	32	230
Resolution (cm^{-1}):	4	4	4
Number of sample scans:	32	128	32
Number of background scans:	32	128	32
Background collection:	Before Sample	After Sample	Before Sample
Final Format:	%Transmittance	%Transmittance	%Reflectance
Correction & Attenuation:	None	None	None
Zero filling:	None	None	None
Apodization:	Happ-Genzel	Happ-Genzel	Happ-Genzel
Phase correction:	Mertz	Mertz	Mertz

12.6.2 The operating conditions will be included in the case file. This is typically accomplished via the inclusion of the FTIR Conditions Worksheet.

12.7 Maintenance

COPYRIGHT © 2023

12.7.1 Maintenance and/or repairs to the FTIR system, computer or peripherals will be performed as needed and summarized in the log book to include the date and initials of the person making the entry.

12.8 Documentation

VIRGINIA DEPARTMENT OF FORENSIC SCIENCE

12.8.1 FTIR spectra will be printed as follows:

- Split at 2000 cm^{-1}
- X-axis limits will be appropriate to the experiment spectral range listed above
- The spectrum will occupy the maximum amount of space on the page as possible
- One spectrum per page

12.8.2 FTIR spectra will be labeled as follows:

- FS Lab #, Item # and how prepared (e.g., diamond cell, KBr pellet, liquid, vapor, etc.)
- Note if acquired with the bench or microscope (this may appear in the case notes in lieu of on the individual spectrum). Include the appropriate conditions in the case file.
- Date and time
- Filename (optional)

UNCONTROLLED COPY

13 GAS CHROMATOGRAPH (GC)

13.1 Materials

13.1.1 Capillary Columns

13.1.1.1 All routine methods use flexible fused silica capillary columns containing a bonded, cross-linked stationary phase. The stationary phase is chosen to affect needed resolution. Examples include 5% phenylmethyl silicone (i.e., HP-5) and polyethylene glycol (i.e., DBWAX). The normal general purpose column has a 0.25 µm film thickness and 0.25 mm internal diameter.

13.1.1.2 For some general chemical examinations, it may be necessary to use an alternative column for specialized analysis or if more resolving power is required, or an additional, different diameter and/or phase column can be temporarily attached at the end of the existing column by using an appropriate connector. Guidance from the instrument operator is recommended.

13.1.2 Additional Instrument Parameters

COPYRIGHT © 2023

13.1.2.1 The carrier gas is normally high purity helium at a flow rate of 0.5 to 3 mL/min.

13.1.2.2 When using the FID detector, helium makeup gas is supplied in order to support gas flow to provide optimal detector sensitivity.

VIRGINIA

13.1.2.3 Split/splitless liners designed specifically for use with the particular instrument should be used.

DEPARTMENT OF FORENSIC SCIENCE

13.2 Maintenance

13.2.1 The GC septum and injection port glass liners are changed as needed.

13.2.2 If using a regulator, the pressure of the compressed gas cylinder providing research grade helium to the system should be checked and the tank changed as needed (at a minimum of ~250 psi).

13.2.3 If using a hydrogen generator, the water level is checked and water is added to approximately the fill line as needed.

13.2.4 Gas line moisture traps and oxygen scrubbers are changed as needed.

13.2.5 Record any maintenance performed in the instrument logbook, date and initial.

13.2.6 Data files will be backed up by copying them annually, at a minimum, to the Department's intranet and retained there for a period of no more than 2 years.

13.2.7 When noticeable changes (i.e., decreased resolution, decreased sensitivity) occur in the instrument's performance as noted in check samples or standard samples, the following items shall be checked as necessary: septum, injection port liner, column nut, column, and autosampler. Any maintenance or repair will be recorded in the instrument logbook.

13.2.8 Hydrogen Generator Maintenance:

13.2.8.1 Fill with deionized water as needed.

13.2.8.2 Perform, at a minimum, annual preventive maintenance which may include changing filters, electrolytes, cartridges, or other parts as necessary. Semiannual preventive maintenance may be performed to troubleshoot or if it provides enhanced performance. When performing annual or semi-annual preventive maintenance, follow instructions from the manufacturer.

UNCONTROLLED COPY

The *Hydrogen Generator Maintenance Log* shall be used to record any maintenance performed (excludes water refilling).

13.3 QC Procedures

13.3.1 Day-of-Use

13.3.1.1 The Polar Check Sample (PCS) is injected to monitor the resolution and sensitivity of the instrument when a polar column is installed. For non-polar columns, the Resolution Test Mixture (RTM) is injected to monitor the resolution and sensitivity of the instrument.

13.3.1.2 Polar Check Sample (PCS) QC mix: (Polar Columns)

To 300 mL of carbon disulfide, add 3 drops each of ethyl benzene, limonene, α-pinene, β-pinene, toluene, 1,2,4-trimethylbenzene, *o*-xylene, *m*-xylene, and *p*-xylene.

13.3.1.3 Resolution Test Mixture (RTM): (Non-polar Columns)

COPYRIGHT © 2023

1,2,4-Trimethylbenzene, m-Ethyltoluene, o-Ethyltoluene , p-Xylene , Toluene , n-Hexane (C6) , n-Octane (C8) , n-Decane (C10), n-Dodecane (C12), n-Tetradecane (C14), n-Hexadecane (C16), n-Octadecane (C18), n-Eicosane (C20)

13.3.1.4 Acceptance Criteria:

VIRGINIA DEPARTMENT OF FORENSIC SCIENCE

13.3.1.4.1 Polar Check Sample: The check sample chromatogram is compared to previous ones, if available, for relative sensitivity, resolution, and baseline profile. The abundance from the baseline to the valley between the p-xylene and m-xylene peaks must be no greater than approximately 10% of the abundance of the weaker peak. Retention times must be within 0.033 minutes from the previous PCS check unless extenuating circumstances exist. If the check sample chromatogram is not acceptable, do not use the instrument until corrected.

13.3.1.4.2 Resolution Test Mixture: The retention times for the 1,2,4-Trimethylbenzene (1,2,4-TMB) peak and the hexadecane (C16) peak must be within 0.033 minutes from the previous RTM QC check.

13.3.1.5 Check sample chromatograms are retained for five years.

13.3.1.6 Whenever a new column is installed, it shall be checked with an appropriate check sample.

13.4 Analysis of Casework Samples

13.4.1 Routinely, 1 µL injection volumes are used. However, injection volumes may range from a needle dip to 3.0 µL for diluted standards and case samples and up to 2.0 mL for headspace samples. Samples may be concentrated to avoid injecting higher volumes.

13.4.2 It is encouraged that general chemical case samples be characterized as much as possible prior to injection into the instrument.

13.4.2.1 Samples may be diluted or dissolved in an appropriate solvent.

13.4.2.2 Depending on the nature of the sample, some samples must be cleaned up by extraction.

13.4.2.3 Some compounds do not chromatograph well, requiring derivatization to help effect good chromatographic peak shape.

13.4.3 Standards/references used in the comparison shall be run on the same day as the sample whenever possible, except for fire debris. “Same day” is defined as an approximate 24 hour period. Circumstances

UNCONTROLLED COPY

may exist where the sample and reference cannot be run on the same day; under these circumstances, the Section Supervisor may approve this minor deviation.

13.4.4 Appropriate standards/reference samples and blanks shall be run.

13.4.4.1 The blank, standard, and sample must be run under the same chromatographic conditions and data acquisition parameters, as appropriate.

13.4.4.2 A blank, run prior to each sample, shall be appropriate for the sample being run, i.e., an appropriate solvent or the solvent(s) used to dissolve or dilute the case samples, room air for headspace injections, or the clean needle to be used for needle dip scenarios. Additional blanks may be run at the examiner's discretion.

13.4.4.3 When running multiple samples, a blank shall be run between sample injections. An extraction blank may be used as a blank that is run between sample injections.

13.4.5 The date, the initials of the examiner, the FS Lab#, sequences and/or samples (including standards) are maintained in a sample log.

COPYRIGHT © 2023

13.4.5.1 Sequencing via autosampler should be utilized whenever practical.

13.4.5.2 If individual samples are not recorded in the logbook, completed sequence logs shall be printed and retained.

VIRGINIA DEPARTMENT OF FORENSIC SCIENCE

13.4.6 Integrated retention times for analytes must agree with the standard within 0.033 minutes.

13.5 Documentation

13.5.1 Sample chromatograms are compared to known standard chromatograms according to retention times and overall patterns.

13.5.2 To include in the case file:

13.5.2.1 Chromatogram of blank showing the entire range demonstrating that there are no interfering peaks in the region of interest.

13.5.2.2 Chromatograms of both sample and standard with integrated retention times.

13.5.2.3 If a method other than those listed in 13.6 is used, document the method parameters used (e.g., print the method).

13.5.3 The minimum requirements for labeling data is as follows:

- FS Lab #
- Item Number
- Examiner's handwritten initials
- Injection volume, unless noted in the GC-FID method below
- Injection solvent

13.6 Generally Used GC-FID Methods

13.6.1 Autosampler Injections

Method Name	PAUTO1-50-240	PAUTO2-20-240	PAUTO1-50-160	PAUTO2-20-160

UNCONTROLLED COPY

Injection Type	1 µL autosampler	2 µL autosampler	1 µL autosampler	2 µL autosampler
Column	Carbowax	Carbowax	Carbowax	Carbowax
Oven Parameters	40°C (2 min hold) Ramp 15°C/min to 240°C (0.67 min hold)	40°C (2 min hold) Ramp 15°C/min to 240°C (0.67 min hold)	40°C (2 min hold) Ramp 15°C/min to 160°C (0.5 min hold)	40°C (2 min hold) Ramp 15°C/min to 160°C (0.5 min hold)
Inlet/Detector Temp	235°C / 245°C	235°C / 245°C	235°C / 245°C	235°C / 245°C
Column Flow	1.8 mL/min	1.8 mL/min	1.8 mL/min	1.8 mL/min
Split Ratio	Split 50:1	Split 20:1	Split 50:1	Split 20:1

13.6.2 Manual injections

Method Name	PMAN1-50-240	PMAN2-20-240	PMAN1-50-160	PMAN2-20-160
Injection Type	Manual	Manual	Manual	Manual
Column	Carbowax	Carbowax	Carbowax	Carbowax
Oven Parameters	40°C (2 min hold) Ramp 15°C/min to 240°C (0.67 min hold)	40°C (2 min hold) Ramp 15°C/min to 240°C (0.67 min hold)	40°C (2 min hold) Ramp 15°C/min to 160°C (0.5 min hold)	40°C (2 min hold) Ramp 15°C/min to 160°C (0.5 min hold)
Inlet/Detector Temp	235°C / 245°C	235°C / 245°C	235°C / 245°C	235°C / 245°C
Column Flow	1.8 mL/min	1.8 mL/min	1.8 mL/min	1.8 mL/min
Split Ratio	Split 50:1	Split 20:1	Split 50:1	Split 20:1

COPYRIGHTED © 2023
VIRGINIA
DEPARTMENT
OF
FORENSIC SCIENCE

UNCONTROLLED
COPY

14 GAS CHROMATOGRAPH-MASS SPECTROMETER (GC-MS)

14.1 Materials

14.1.1 Capillary Columns

14.1.1.1 All routine methods use flexible fused silica capillary columns containing a bonded, cross-linked stationary phase. The stationary phase is chosen to affect needed resolution. Examples include methylsilicone (i.e., HP-1MS) and 5% phenylmethyl silicone (i.e., HP-5). The normal general purpose column has a 0.25 µm film thickness and 0.25 mm internal diameter.

14.1.1.2 Fire Debris cases shall be examined using a HP-1MS column or equivalent, 30 m X 0.25 mm ID X 0.25 µm film thickness.

14.1.1.3 For some general chemical examinations, it may be necessary to use an alternative column for specialized analysis or if more resolving power is required, or an additional, different diameter and/or phase column can be temporarily attached at the end of the existing column by using an appropriate connector. Guidance from the instrument operator is recommended.

COPYRIGHT © 2023

14.1.1.4 The carrier gas is normally high purity helium at a flow rate of 0.5 to 3 mL/min.

14.1.1.5 Split/splitless liners designed specifically for use with the particular instrument should be used.

VIRGINIA DEPARTMENT OF FORENSIC SCIENCE

14.2 Maintenance

14.2.1 GC septum and injection port glass liners are changed as needed.

14.2.2 If using a regulator, the pressure of the compressed gas cylinder providing research grade helium to the system should be checked and the tank changed as needed (at a minimum of ~250 psi).

14.2.3 Gas line moisture traps and oxygen scrubbers are changed as needed.

14.2.4 Record any maintenance performed in the instrument logbook, date and initial.

14.2.5 When noticeable changes (i.e., air leaks, decreased resolution, decreased sensitivity) occur in the instrument's performance as noted in the autotune, standard samples, or check samples, the following items shall be checked as necessary: septum, injection port liner, column nut, GC-MS interface nut, column, autosampler, and MS source. Any maintenance or repair will be recorded in the instrument logbook.

14.2.6 Data files will be backed up by copying them monthly to the Department's intranet and retained there for a period of no more than 2 years. Method and macro files shall be copied to the Department's intranet biannually, at a minimum.

14.2.7 If documented maintenance is conducted on the instrument which results in a retention time shift, the Resolution Test Mixture (See ¶ 14.3.1.3) must be run prior to any case samples.

14.3 QC Procedures

14.3.1 Day-of-Use

14.3.1.1 The GC-MS shall be tuned using autotune (ATUNE) with perfluorotributylamine (PFTBA).

14.3.1.1.1 The peak width at half height (pW50) will be changed from the factory setting of 0.6 to a value of 0.5.

UNCONTROLLED COPY

14.3.1.1.2 The autotune report must be examined to ensure that all parameters are within an acceptable range. If the autotune report is not acceptable, do not use the instrument until this condition is corrected. An acceptable tune will be noted in the logbook with the date and initials of the approving examiner. Hard copies of tunes shall be retained for five years.

Autotune Acceptance Criteria:

TUNE PARAMETER	SPECIFIC PARAMETER	ACCEPTANCE RANGE
Peak widths	0.50 Da	± 0.05 Da (spread between values ≤ 0.05)
Mass assignment	69.00, 219.00, 502.00 Da	± 0.10 Da
Isotope Ratios	Ratio of mass 70 to 69	0.5 – 1.6%
Isotope Ratios	Ratio of mass 220 to 219	3.2 – 5.4%
Isotope Ratios	Ratio of mass 503 to 502	7.9– 12.3%

COPYRIGHT © 2023

14.3.1.2 A background spectrum shall be collected for the GC-MS.

VIRGINIA DEPARTMENT OF FORENSIC SCIENCE

14.3.1.2.1 The background spectrum must be examined to ensure that all parameters are within an acceptable range. If the background spectrum is not acceptable, do not use the instrument until this condition is corrected. An acceptable background will be noted in the logbook with the date and initials of the approving examiner. Copies of backgrounds shall be retained for five years.

14.3.1.3 For HP-1 MS columns or their equivalent:

14.3.1.3.1 The Resolution Test Mixture (RTM) shall be injected to monitor GC-MS performance. This test mixture shall be a certified reference material containing the following compounds:

1,2,4-Trimethylbenzene, m-Ethyltoluene, o-Ethyltoluene , p-Xylene , Toluene , n-Hexane (C6) , n-Octane (C8) , n-Decane (C10), n-Dodecane (C12), n-Tetradecane (C14), n-Hexadecane (C16), n-Octadecane (C18), n-Eicosane (C20)

RTM acceptance criteria: The retention times for the 1,2,4-Trimethylbenzene (1,2,4-TMB) peak and the hexadecane (C16) peak must be within 0.033 minutes of the retention times from the previous RTM QC check. If the RTM is not acceptable, do not use the instrument until this condition is corrected.

14.3.1.3.2 The Oxygenate Check Sample (OCS) (1:2:1 acetone, ethanol and methylethylketone in CS_2) shall be injected to monitor GC-MS performance. This will serve as a check of the resolution and proper functioning of the instrument. The method for the oxygenate check sample may be truncated to stop after the last compound has eluted.

OCS acceptance criteria: The abundance from the baseline to the valley between the acetone and ethanol peaks must be no greater than approximately 10% of the abundance of the acetone peak. If the OCS is not acceptable, do not use the instrument until this condition is corrected.

14.3.1.3.3 Record RTM and OCS runs in instrument log. RTM and OCS QC data is retained for five years.

UNCONTROLLED COPY

14.3.1.4 For DB-17 columns or their equivalent:

14.3.1.4.1 The Polar Check Sample (PCS) is injected to monitor the resolution and sensitivity of the instrument. Polar Check Sample (PCS) QC mix:

To 300 mL of carbon disulfide, add 3 drops each of ethyl benzene, limonene, α-pinene, β-pinene, toluene, 1,2,4-trimethylbenzene, *o*-xylene, *m*-xylene, and *p*-xylene.

PCS Acceptance Criteria: The check sample chromatogram is compared to previous ones, if available, for relative sensitivity, resolution, and baseline profile. The abundance from the baseline to the valley between the limonene and 1,2,4-trimethylbenzene peaks must be no greater than approximately 10% of the abundance of the weaker peak. Retention times must be within 0.033 minutes from the previous PCS check unless extenuating circumstances exist. If the check sample chromatogram is not acceptable, do not use the instrument until corrected.

COPYRIGHT © 2023

14.4 Analysis of Casework Samples

14.4.1 The maximum allowable temperature program ramp rate for reproducible retention times is 30°C/min for Agilent GC models 6890 and higher.

VIRGINIA DEPARTMENT OF FORENSIC SCIENCE

14.4.2 In most instances, injection is made in the split mode at a split ratio of either 50:1 or 20:1. Splitless injections may be used when it is necessary to increase the amount of analyte delivered to the column and the detector.

14.4.2.1 Generally, a 50:1 split ratio is used for diluted standards and "strong" case samples, while a 20:1 split ratio is used for weaker case samples. Splitless injections may be used for even weaker samples. Routinely, a starting place for injections would be: 1.0 µL at 50:1 for diluted standards and "strong" case samples, and 2.0 µL at 20:1 for extracted case samples.

14.4.2.2 Changing the sample concentration, using larger injection volumes, or using SIM may be helpful when case samples are weaker than identification in full scan mode allows. Before using SIM, confirm that there is an indication that the compound(s) of interest are present at the appropriate retention time(s) with the appropriate major ions.

14.4.3 Normal injection volumes for diluted standards and case samples range from a needle dip to 3.0 µL. For headspace samples, injection volumes of up to 2.0 mL may be used. Samples may be concentrated to avoid injecting higher volumes.

14.4.4 It is encouraged that general chemical case samples be characterized as much as possible prior to injection into the instrument.

14.4.4.1 Samples may be diluted or dissolved in an appropriate solvent.

14.4.4.2 Depending on the nature of the sample, some samples must be cleaned up by extraction.

14.4.4.3 Some compounds do not chromatograph well, requiring derivatization to help effect good chromatographic peak shape.

14.4.5 Standards/references used in the comparison shall be run on the same day as the sample whenever possible, except for fire debris. "Same day" is defined as an approximate 24 hour period. Circumstances may exist where the sample and reference cannot be run on the same day; under these circumstances, the Section Supervisor may approve this minor deviation.

UNCONTROLLED COPY

14.4.6 The injection order when running samples with standards should be either "standard, blank, sample(s)" or "blank, sample(s), standard."

14.4.6.1 Appropriate standards/reference samples shall be run.

14.4.6.2 The blank, standard, and sample must be run under the same chromatographic conditions and data acquisition parameters, as appropriate. Additionally, sample concentrations should be approximately the same concentration as the standard.

14.4.6.3 At a minimum, an appropriate blank must be run prior to each sample. Additional blanks may be run at the examiner's discretion.

14.4.6.4 When running multiple samples, a blank shall be run between sample injections. An extraction blank may be used as a blank that is run between sample injections.

14.4.6.5 A blank, run prior to each sample, shall be appropriate for the sample being run, i.e., an appropriate solvent or the solvent(s) used to dissolve or dilute the case samples, room air for headspace injections, or the clean needle to be used for needle dip scenarios. Additional blanks may be run at the examiner's discretion.

14.4.6.6 Disposable syringes are used for headspace injections.

COPYRIGHT © 2023
VIRGINIA
DEPARTMENT
OF
FORENSIC SCIENCE

14.4.7 In a sample log, maintain the date, initials of the examiner, and sequences and/or samples (including standards/references). The FS Lab # shall be included in either the sample log or printed sequence log.

14.4.7.1 Sequencing via autosampler should be utilized whenever practical. If individual samples are not recorded in the logbook, completed sequence logs shall be printed and retained.

14.4.7.2 Handwritten initials shall be added to at least the first page of printed sequences.

14.4.8 The identification of a compound must be based on a comparison of the retention time and the mass spectrum of an actual standard reference material. Integrated retention times for analytes must agree with the standard within 0.033 minutes.

14.5 Documentation

14.5.1 The Total Ion Chromatogram (TIC) for case samples is compared to the TIC for known reference samples according to retention times, mass spectra, and overall patterns.

14.5.1.1 No rigid mass spectral probability based match criteria are defined to identify a compound. Flexibility is given to the experienced interpreter because rigid criteria can lead to misidentification as well as under-identification. The identification will be based on a number of factors, such as retention time, unique ions, ion abundance, S/N and literature references as well as probability based matched scores.

14.5.2 To include in the case file:

14.5.2.1 TIC of blank run before the sample showing the entire range demonstrating that there are no interfering peaks in the region of interest.

14.5.2.1.1 If an extraction blank is used, include the extraction blank TIC showing no peaks in the region of interest at a scale of very low abundance or a printout of a time block around the retention time of interest showing that the extracted ions of the compound of interest are not present.

14.5.2.2 Sample and standard TICs. Library printouts may be included.

UNCONTROLLED
COPY

14.5.2.3 For peak identifications, background subtracted mass spectra and normalized tabulations are necessary.

14.5.2.4 An air peak may be verified on screen and a notation hand-written on the sample's TIC. Alternatively, the TIC and spectrum of the air peak may be printed; however, it is unnecessary to print the tabulation and library search.

14.5.2.5 If a method other than those listed in 14.6 is used, document the method parameters used (e.g., print the method).

14.5.2.6 The minimum requirements for labeling data are as follows:

- FS Lab #
- Item Number
- Examiner's handwritten initials
- Injection volume, unless noted in the GC-MS method below
- Injection solvent

COPYRIGHT © 2023

14.6 Generally Used GC-MS Methods

VIRGINIA DEPARTMENT OF FORENSIC SCIENCE

Method Name	Split Ratio	Injection Type	Initial Oven Temp / Hold Time	Temp Ramp	Temp / Hold Time	Temp Ramp	Final Oven Ramp / Hold Time	Inlet Temp	Transfer Line Temp	Column Flow	Scan Conditions (m/z range)	Solvent Delay	Mass Threshold Setting
AUTF1-50	50:1	ALS - 1µL	40°C / 1.5 min	20°C/min	140°C / 0 min	30°C/ min	300°C / 5.17 min	290°C	300°C	■	14-200 @ 0 min; 14-400 @ 2 min; 14-600 @ 12 min	Timed Event	150
AUTF1-50N	50:1	ALS - 1µL	40°C / 1.5 min	20°C/min	140°C / 0 min	30°C/ min	300°C / 5.17 min	290°C	300°C	■	14-200 @ 0 min; 14-400 @ 2 min; 14-600 @ 12 min		150
AUTF1-50_OCS	50:1	ALS - 1µL	40°C / 1.5 min	20°C/min	140°C / 0 min			290°C	300°C	■	14-200 @ 0 min; 14-400 @ 2 min	Timed Event	150
AUTF2-20	20:1	ALS - 2µL	40°C / 1.5 min	20°C/min	140°C / 0 min	30°C/ min	300°C / 5.17 min	290°C	300°C	■	14-200 @ 0 min; 14-400 @ 2 min; 14-600 @ 12 min	Timed Event	150
AUTF2-20N	20:1	ALS - 2µL	40°C / 1.5 min	20°C/min	140°C / 0 min	30°C/ min	300°C / 5.17 min	290°C	300°C	■	14-200 @ 0 min; 14-400 @ 2 min; 14-600 @ 12 min		150
AUTF2-20_OCS	20:1	ALS - 2µL	40°C / 1.5 min	20°C/min	140°C / 0 min			290°C	300°C	■	14-200 @ 0 min; 14-400 @ 2 min	Timed Event	150
HDSPCE_40ISO	50:1	Manual	40°C / 5 min					290°C	300°C	1.5 mL/min	14-600		50
HEADSPAC	20:1	Manual	35°C / 4 min	10°C/min	100°C / 0 min			290°C	300°C	▲	10-150		50
GenScrn_1A	50:1	ALS - 1µL	60°C / 1 min	30°C/min	300°C / 6 min			290°C	300°C	1.5 mL/min	14-600 @ 1.8 min	1.8 min	150
GenScrnHDSPCE_1M	50:1	Manual	40°C / 0.5 min	20°C/min	100°C / 2 min	30°C/ min	130°C / 1 min	290°C	300°C	1.5 mL/min	14-600		50
LACH2-20	20:1	ALS - 2µL	200°C / 2 min	15°C/min	300°C / 3.33 min			290°C	300°C	●	14-200 @ 0 min; 14-400 @ 2 min; 14-600 @ 12 min		150
LUBRICANTS	10:1	ALS - 1µL	40°C / 2 min	20°C/min	290°C / 5 min			290°C	300°C	1.8 mL/min	14-550		150
PAUTO1-50-240	50:1	ALS - 1µL	40°C / 2 min	15°C/min			240°C/0.67 min	235°C	245°C	■	14-200 @ 0 min; 14-400 @ 2 min; 14-600 @ 12 min	Timed event	150
PAUTO1-50-240n	50:1	ALS - 1µL	40°C / 2 min	15°C/min			240°C/0.67 min	235°C	245°C	■	14-200 @ 0 min; 14-400 @ 2 min; 14-600 @ 12 min		150

UNCONTROLLED COPY

PAUTO2-20-240	20:1	ALS - 2µL	40°C / 2 min	15°C/min			240°C/0.67	235°C	245°C	■	14-200 @ 0 min; 14-400 @ 2 min; 14-600 @ 12 min	Timed Event	150
PAUTO2-20-240n	20:1	ALS - 2µL	40°C / 2 min	15°C/min			240°C/0.67	235°C	245°C	■	14-200 @ 0 min; 14-400 @ 2 min; 14-600 @ 12 min		150
PAUTO1-50-160	50:1	ALS - 1µL	40°C / 2 min	15°C/min			160°C/0.50	235°C	245°C	■	14-200 @ 0 min; 14-400 @ 2 min	Timed Event	150
PAUTO2-20-160	20:1	ALS - 2µL	40°C / 2 min	15°C/min			160°C/0.50	235°C	245°C	■	14-200 @ 0 min; 14-400 @ 2 min	Timed Event	150
PAUTO2-20-160n	20:1	ALS - 2µL	40°C / 2 min	15°C/min			160°C/0.50	235°C	245°C	■	14-200 @ 0 min; 14-400 @ 2 min		150
PMAN1-50-240	50:1	Manual	40°C / 2 min	15°C/min			240°C/0.67	235°C	245°C	■	14-200 @ 0 min; 14-400 @ 2 min; 14-600 @ 12 min	Timed Event	150
PMAN2-20-240	20:1	Manual	40°C / 2 min	15°C/min			240°C/0.67	235°C	245°C	■	14-200 @ 0 min; 14-400 @ 2 min; 14-600 @ 12 min	Timed Event	150
PMAN2-20-240n	20:1	Manual	40°C / 2 min	15°C/min			240°C/0.67	235°C	245°C	■	14-200 @ 0 min; 14-400 @ 2 min; 14-600 @ 12 min		150
PMAN1-50-160	50:1	Manual	40°C / 2 min	15°C/min			160°C/0.50	235°C	245°C	■	14-200 @ 0 min; 14-400 @ 2 min	Timed Event	150
PMAN2-20-160	20:1	Manual	40°C / 2 min	15°C/min			160°C/0.50	235°C	245°C	■	14-200 @ 0 min; 14-400 @ 2 min	Timed Event	150
PMAN2-20-160n	20:1	Manual	40°C / 2 min	15°C/min			160°C/0.50	235°C	245°C	■	14-200 @ 0 min; 14-400 @ 2 min		150
SUGARTMS_1A	50:1	ALS - 1µL	150°C / 1 min	30°C/min	300°C / 4 min			290°C	290°C	1.2 mL/min	14-600 @ 2.3 min	2.3 min	150
SUGARTMS_3A	50:1	ALS - 3µL	150°C / 1 min	30°C/min	300°C / 4 min			290°C	290°C	1.2 mL/min	14-600 @ 2.3 min	2.3 min	150
SMOKY	16.66:1	ALS - 2 µL	50°C / 2 min	20°C/min	100°C / 0.5 min	25°C/min	300°C / 2 min	240°C	300°C	1.2 mL/min	14-400 @ 3.3 min; 14-600 @ 10 min	3.3 min	150

▲ = 0.6 mL/min (0 min hold), Ramp 20 mL/min^2 to 1.2 mL/min (9.97 min hold), Ramp 20 mL/min^2 to 1.8 mL/min (0 min hold)

■ = 1.8 mL/min (2 min hold), Ramp 20 mL/min^2 to 1.2 mL/min (9.97 min hold), Ramp 20 mL/min^2 to 1.8 mL/min (0 min hold)

● = 1.8 mL/min (2 min hold), Ramp 20 mL/min^2 to 1.2 mL/min (7.97 min hold)

Timed Event = time when the detector does not collect data, based on when solvent elutes

COPYRIGHT © 2023 VIRGINIA DEPARTMENT OF FORENSIC SCIENCE

UNCONTROLLED COPY

15 GLASS REFRACTIVE INDEX MEASUREMENT SYSTEM (GRIM3)

15.1 Introduction

15.1.1 A sample log will be maintained that includes at a minimum the date, initials of the examiner, the FS Lab # or other identifying information. Calibration and QA data are maintained in a QA log. Any maintenance performed, the date, and initials of the examiner shall also be logged and maintained.

15.1.2 Data files will be backed up by copying them on a biannual basis to the Department's intranet and retained there for a period of no more than 2 years.

15.2 Calibration

15.2.1 Calibration of the instrumentation is performed on an annual basis for the silicone oil and interference filter being used in casework. The calibration data is used by the GRIM3 system to determine refractive index (RI) at the given filter wavelength. The system is calibrated with the 589 nm interference filter using Locke Scientific Silicone Oil B and the Locke Scientific B Series of glass standards (B2 –B4; B7-B12) using the declared RI values. Five readings from five glass particles are obtained from one prepared slide of each of the Locke Scientific B Series glass standards used. The calibration correlation value must be less than or equal to -0.99990. The dRI must be between -10 and +10 inclusive for each standard glass analyzed. New slides of the Locke B standards will be prepared annually.

COPYRIGHT © 2023 VIRGINIA DEPARTMENT OF FORENSIC SCIENCE

15.2.2 The calibration of the GRIM3 system using the Locke B oil will be checked using Locke glass standards B3, B6 and B11 taking five readings from five glass particles from one prepared slide. The mean of the five readings will be compared to the declared certificate value for the B3, B6 and B11 glasses. This value must be +/- 0.00010 of the declared certified value.

15.2.3 If headlight glass is encountered, the GRIM3 is calibrated at 589 nm using Locke Scientific Silicone Oil C and the Locke Scientific C Series of glass standards using the RI values from the table in the Locke manual that are closest to the match temperature of the glasses used. Five readings from five particles are obtained from one prepared slide of each of the appropriate glass standards. The calibration correlation value must be less than or equal to -0.99990. The dRI must be between -10 and +10 inclusive for each standard glass analyzed. Prepare glass standard slides, as appropriate. This calibration for headlight glass is good for one year from the date it was obtained.

15.2.4 The calibration of the GRIM3 system using the Locke C oil will be checked with NIST SRM 1820 taking five readings from five glass particles from one prepared slide. The mean of the five readings will be compared to the certificate value for the NIST SRM 1820. This value must be +/- 0.00010 of the certificate value for the SRM. New slides of the NIST SRM 1820 will be prepared as needed and may be used for up to one year from preparation. Since the use of this oil is non-routine, the data will be photocopied and retained in the case file. Additionally, the original data will be printed and retained in the QA binder for the equipment.

15.2.5 If glass is encountered which has a very high refractive index that is above the range of the Locke Scientific Silicone Oil B, the GRIM3 can be calibrated at 589 nm using Locke Scientific Silicone Oil A and the Locke Scientific A Series and B Series of glass standards, as appropriate, using RI values from the table in the Locke manual that are closest to the match temperature of the glasses used. Five readings from five particles are obtained from one prepared slide of each of the appropriate glass standards. The calibration correlation value must be less than or equal to -0.99990. The dRI must be between -10 and +10 inclusive for each standard glass analyzed. Prepare glass standard slides, as appropriate. This calibration for glass with a very high refractive index is good for one year from the date it was obtained.

15.2.6 The calibration of the GRIM3 system using the Locke A oil will be checked using Locke glass standard A4. Locke glass standard A4 will be prepared as needed and may be used for up to one year from preparation. Five readings from five particles are obtained from one prepared slide of each of the appropriate glass standards. The mean of the five readings will be compared to the RI value from the table in the Locke manual for A4 and must be +/- 0.00010 of the RI value from the table in the Locke

UNCONTROLLED COPY

manual for A4. Since the use of this oil is non-routine, the data will be photocopied and retained in the case file. Additionally, the original data will be printed and retained in the QA log for the equipment.

15.2.7 The calibration data will be printed and retained in the QA log which will be maintained with the equipment.

15.3 Monthly QA

15.3.1 The following monthly QA procedures must be performed prior to use in casework. If the system is not used for casework during a given month, these procedures do not have to be performed until the next time casework is performed.

15.3.2 The Mettler hot stage on the GRIM3 system will be inspected internally for residual mounting oil. In addition, the glass slide that is positioned in the hot stage under the objective opening will also be inspected. Set the hot stage temperature to a low setting and clean the hot stage and glass slide with methyl or isopropyl alcohol as needed.

COPYRIGHT © 2023

15.3.3 The accuracy of the GRIM3 system will be checked using Locke glass standards B3, B6 and B11 in the Locke Silicone Oil B. Five readings from five particles are obtained from one prepared slide of each of the appropriate glass standards. The mean of the five readings will be compared to the certificate value for the B3, B6 and B11 glasses. These values must be +/- 0.00010 of the declared certified value.

VIRGINIA DEPARTMENT OF FORENSIC SCIENCE

15.3.4 When the monthly QA check is performed, the data will be printed and retained in the QA log which will be maintained with the instrument. No QA data will exist for months in which no casework was performed.

15.4 Day-of-Use QA

15.4.1 The Day-of-Use QA will be performed each day prior to running case samples. The Day-of-Use QA is not necessary when completed on the same day as the Monthly QA. The calibration will be checked using Locke glass standard B6 in the Locke Silicone Oil B. Five readings from five particles are obtained from one prepared slide. The mean of the five readings will be compared to the certificate value for the B6 glass. This value must be +/- 0.00010 of the declared certified values for the B6 glass. Include the data for this QA check with each case file analyzed that day.

15.5 Case QC Check

15.5.1 For each case examined with a single known glass sample, a single glass standard is analyzed using the appropriate wavelength and oil. The Locke glass standard selected for this QC check will be that which is closest to the refractive index value of the known glass. If multiple known glass samples of different refractive indices are present, then multiple glass standards may be necessary. Five readings from five particles are obtained from one prepared slide of each of the appropriate glass standards. The mean of the five readings will be compared to the certificate value for the glass standard(s). This value must be +/- 0.00010 of the declared certified value. The QC check shall be included in the case file.

UNCONTROLLED COPY

16 ION CHROMATOGRAPH (IC)

16.1 Introduction

16.1.1 The QC checks will be performed prior to using the instrument for casework. All associated files, per sequence, will be backed up by copying them on a biannual basis to the Department's intranet and retained there for a period of no more than 2 years.

16.1.2 Sequencing via autosampler should be utilized whenever practical.

16.1.3 Column logs shall be maintained that include at a minimum the date, initials of the examiner, the sequence name, system pressure, detector background, and appropriate standard peak retention times.

16.1.3.1 Retention times are recorded, at a minimum, for standards that are to be included in a case file.

16.1.3.2 Sequences shall be printed and retained.

COPYRIGHT © 2023

16.1.4 A service log shall be maintained that includes any maintenance performed, the date, and initials of the examiner.

16.2 The Dionex reference standard for the anion system consists of fluoride, chloride, nitrate, sulfate, and phosphate ions. Nitrite, chlorite and chlorate will be added when necessary. A perchlorate reference standard is prepared in-house and used when applicable. The reference standard for the cation system consists of lithium, sodium, ammonium, potassium, magnesium, and calcium.

VIRGINIA DEPARTMENT OF FORENSIC SCIENCE

The approximate concentrations of each are as follows: (Note: ppm = mg/L)

Anions	Anions	Cations
Fluoride - 20 ppm	Perchlorate – variable	Lithium - 50 ppm
Chloride - 30 ppm		Sodium - 200 ppm
Nitrate - 100 ppm		Ammonium - 400 ppm
Phosphate - 150ppm		Potassium - 200 ppm
Sulfate - 150 ppm		Magnesium - 200 ppm
[Nitrite ~ 100 ppm]		Calcium - 1000 ppm
[Chlorite ~ 100 ppm]		
[Chlorate ~ 100 ppm]		

16.3 The system is configured with the necessary eluent, regenerant, columns, suppressors, and detector as established by the manufacturer.

16.4 Day-of-Use

16.4.1 Prior to each day's use, the IC system is initially flushed until an acceptable and stable baseline is established.

16.4.2 The appropriate standard is injected twice, successively to demonstrate system stability. These chromatograms are evaluated subjectively on the basis of relative retention times, peak resolution, baseline stability, and peak heights.

16.4.2.1 If an acceptable and stable baseline and/or two successive, reproducible chromatograms cannot be achieved, more successive standards may be injected. If stability still cannot be achieved, then do not use the instrument and call for a repair.

16.4.2.2 To account for possible drift, the same standard is also run twice at the end of the sequence, following casework samples. Additional pairs of standards may be run in the middle of the sequence if the sequence contains a large number of samples.

UNCONTROLLED COPY

16.4.3 Blanks must be run between all samples, however, is not necessary between the pairs of standards.

16.4.4 Corrective procedures are performed on the unit as required through monitoring the parameters and performance.

16.5 Documentation

16.5.1 When a sequence with case samples is started, record the system pressure and background conductivity in the column log.

16.5.2 After comparing the four (or more) standard chromatograms to casework sample data, the most appropriate standard will be chosen for inclusion into the case file. From this standard chromatogram, the following parameters are recorded in a logbook: date; column used; and appropriate standard peak retention times. The remaining standard chromatograms will be printed and retained for 5 years.

16.6 A service contract is maintained, and the instrument receives an annual diagnostic check, including the electronics.

COPYRIGHT © 2023

VIRGINIA
DEPARTMENT
OF
FORENSIC SCIENCE

UNCONTROLLED
COPY

17 MICROSPECTROPHOTOMETER (MSP)

17.1 Overview

17.1.1 The CRAIC 2030 PV microspectrophotometer uses a dual lamp deuterium/halogen system to optimize light throughput in the UV and Visible ranges. Visualization of the sample is done using the halogen lamp, with the sample only exposed to the deuterium lamp during a sample scan to reduce the potential for photo bleaching of the sample.

17.1.2 Data from both lamps is collected separately and then stitched together by the software for display. Individual spectra from each lamp are collected and available to view. The stitched spectra utilizes data from the deuterium lamp below 445 nm and data from the halogen lamp above 455 nm.

17.1.2.1 As a result of spectral stitching, an artifact may be seen around 455 nm. This results from differences in transmission for the two lamps between 445 nm and 455 nm. A stitching artifact may appear as a sudden sharp change in slope or line shape.

COPYRIGHT © 2023

17.1.3 The CRAIC 2030 PV instrument has 10x and 40x objectives available for use. Each objective requires a different microscope setup for optimal light throughput. Settings can be changed if needed to optimize light throughput but a minimum condenser aperture setting of 1.0 for the 10x objective and 2.5 for the 40x objective should be used to avoid artifacts.

VIRGINIA DEPARTMENT OF FORENSIC SCIENCE

17.1.3.1 Recommended microscope setup:

10x Objective:	40x Objective:
Condenser aperture: 1.5	Condenser aperture: 3.0
Light intensity: 4	Light intensity: 7

17.2 Day-of-Use QC Check

17.2.1 The lamps will remain on for a minimum of thirty minutes prior to conducting the QC checks. The halogen lamp power supply is controlled by the microscope power switch. The deuterium lamp has a separate power supply.

17.2.2 Wavelength Checks will be performed using the following instrument parameters:

- AutoCalibration - Transmission tool
- Focused on an ink-free area on the reference slide
- Objective: 10X or 40X, depending on what will be used for casework
- Aperture: 4
- Holmium Oxide & Didymium Filters

The wavelength checks must be within the manufacturer's established calibration limits to pass. The results shall be saved, printed, initialed, and retained for 5 years.

17.2.3 Photometric Checks will be performed using the following instrument parameters:

- AutoCalibration - Transmission tool
- Focused on an ink-free area on the reference slide
- Objective: 10X or 40X, depending on what will be used for casework
- Aperture: 4
- Neutral Density Filters: 0.1, 0.5, and 1.0

The photometric checks must be within the manufacturer's established calibration limits to pass. The results shall be saved, printed, initialed, and retained for 5 years.

UNCONTROLLED COPY

17.2.4 UV Peak Check includes manually checking two certified peaks in the UV region of the Holmium Oxide filter using the following instrument parameters:

- Wavelength range: 240-300 nm
- Resolution factor : 0
- Aperture: 4
- Measurements taken in Absorbance

The peak values are compared to the certified values to ensure the instrument is within established manufacturer's calibration limits. A copy of the spectrum with the two peaks displayed will be generated, initialed, and retained in for 5 years. If the UV Peak check has been previously performed during the given calendar month, the UV Peak Check does not need to be redone.

17.2.5 If the obtained values for the Holmium oxide, Didymium, and neutral density filters do not fall within the current NIST certified reference value ranges, ensure the microscope is set up as recommended for the respective objective, make adjustments as needed, and repeat the instrument wavelength check and photometric calibrations. **DO NOT PROCEED WITH CASEWORK SAMPLES** until all of the filter peak mark values are within an acceptable range of the NIST certified reference values. Call Craic Technical Support as needed.

COPYRIGHT 2023 VIRGINIA DEPARTMENT OF FORENSIC SCIENCE

17.3 Analysis of Casework Samples

17.3.1 Prior to using the MSP, evidence samples have already been visually and/or microscopically compared and found to have no meaningful, or unexplainable, differences in the side-by-side comparison of color. The QC checks using the Holmium oxide, Didymium, and neutral density filters have been completed prior to, and on the same day, as casework MSP spectra are obtained.

17.3.2 Spectra are collected considering the following:

17.3.2.1 Two objectives are available for use (10X and 40X). The selected objective size is dependent upon the size of the material being examined.

17.3.2.2 All casework samples will be collected with a resolution factor of 2.

17.3.2.3 The appropriate sampling aperture size should be selected such that it is completely contained in the area of the sample to be measured.

17.2.2.1.1 The aperture size used for data collection will be recorded on the spectra.

17.3.2.4 Samples shall be mounted using quartz slides and cover slips if they are to be compared in the UV region. Samples shall be mounted in glycerin, xylene substitute or water.

17.3.2.5 While the spectral range extends from 240 nm to 925 nm, generally above 800 nm is too noisy for comparative purposes.

17.3.2.6 Fiber spectra will include the UV with the wavelength range of 240-800 nm.

17.3.2.7 Autoset Optimize sets the integration time for the instrument, Dark Scan establishes and adjusts for instrument noise, and Reference Scan measures and compensates for the light transmitting/absorbing effect of the light source, optics, glass slide, cover slip, and mounting medium. The Dark and Reference Scans are collected consecutively with a single function.

17.3.2.7.1 If the aperture size is changed, a new optimization and Dark/Reference scan is necessary.

17.3.2.7.2 Repeat Autoset Optimize and Dark/Reference Scan periodically during lengthy sample measurement sessions.

UNCONTROLLED COPY

17.3.2.7.3 Generally, whenever the sample is moved out of the field of view to another target location on the same or on a different slide, the Dark/Reference Scan function should be repeated.

17.3.3 The individual sample spectra and spectral averages (optional) are compared between samples (i.e., Q and K). If any meaningful differences are observed, the examiner may discontinue the analysis.

17.3.3.1 Comparisons are not performed between spectra collected with different objectives.

17.3.3.2 To determine if a feature between 445 nm and 455 nm is due to the sample or a stitching artifact, the individual unstitched spectra should be viewed to see if the feature is present. When individual lamp spectra are viewed for stitching artifact determination, the individual lamp spectra shall be printed and included in the case file.

17.3.4 Collected spectra shall be printed and initialed for inclusion in the case file. Spectral averages and individual lamp spectra may also be included in the case file to support drawn conclusions.

COPYRIGHT © 2023

17.4 Maintenance

17.4.1 Maintenance and/or repairs will be performed as needed and summarized in the logbook to include the date and initials of the person making the entry.

VIRGINIA DEPARTMENT OF FORENSIC SCIENCE

17.4.2 Always handle the Holmium oxide, Didymium, and neutral density filters by the edges to avoid fingerprints on the surface. These filters were received with NIST certified values and are sent for re-certification prior to the expiration of their certificates.

17.4.3 Anytime the software is reloaded onto the computer or the filters are recertified, ensure the correct filter values are being used.

17.4.4 In order to preserve the life of the deuterium and halogen bulbs, reduce the number of times the lamps are turned on. When shutting down, turn off the deuterium lamp power supply first, followed by the microscope power which will turn off the halogen lamp. Next, turn off the main power and computer.

17.5 References

17.5.1 CRAIC 20/30 PV Microspectrophotometer Hardware User's Guide, Version 2.5, CRAIC Technologies, Sam Dimas, CA, 2002-2016.

17.5.2 CRAIC LambdaFire Software User's Guide, Version 2.7, CRAIC Technologies, Sam Dimas, CA, 2002-2017

UNCONTROLLED COPY

18 SCANNING ELECTRON MICROSCOPE-ENERGY DISPERSIVE X-RAY ANALYSIS (SEM-EDS)

18.1 General

18.1.1 A service contract may be maintained for each instrument which includes comprehensive annual preventive maintenance (PM) visits. Copies of the paperwork from the annual PM visit, if applicable, are retained in the maintenance log.

18.1.2 Prior to use, the calibration of the x-ray analyzer is checked with a copper standard.

18.1.2.1 If the calibration check fails, attempt to check again. If the calibration check still fails, then call ASPEX service.

18.1.3 The liquid nitrogen Dewar on the x-ray detector is filled at least twice a week to insure that it does not go dry.

18.1.4 The filament assembly is replaced and gun cap cleaned if necessary when the filament burns out. Be aware of elevated temperatures when changing a filament which has been in operation.

18.1.4.1 During filament replacement on the ASPEX Instruments be sure to disable the beam power supply located on the back panel of the beam supply under the bias knob.

18.1.5 Change apertures as indicated by stigmation.

18.1.6 The resolution is checked monthly by taking a 25,000x micrograph of an appropriate standard.

18.1.7 Service, maintenance and other calibration data are logged and kept in the SEM laboratory.

COPYRIGHT © 2023
VIRGINIA DEPARTMENT OF FORENSIC SCIENCE

18.2 ASPEX Daily Operations Log

A bound log is kept for documenting the daily operations of the ASPEX Instruments. This log is separated into columns that include appropriate parameters and a comments section. Comments refer to filament changes, overnight runs and equipment adjustments as they arise.

18.3 SEM-EDS System Maintenance Schedule

18.3.1 Fill the Dewar with liquid nitrogen as needed.

18.3.2 Change the mechanical pump oil when it becomes cloudy, dark, or low.

18.3.3 Perform column maintenance if the image cannot be stigmated.

18.4 ASPEX Emergency Shutdown Procedures

- Turn off filament.
- Minimize perception software.
- Shutdown Windows 2000.
- Turn off main, power and pulse proc. toggle switches on SEM.

18.5 ASPEX EDS System

18.5.1 Prior to use calibration

18.5.1.1 Use a Cu Standard.

18.5.1.1.1 When using the ASPEX or VP2000 instrument the beam is placed on a copper standard and the spot size adjusted to achieve approximately 1,500 CPS with a

UNCONTROLLED COPY

process time of 25.6 µsec at 20KV. A spectrum from 0 to 10.24 KeV is collected and calibrated using the EDS detector calibration software. When using the ASPEX Explorer instrument the beam is placed on a copper standard and the spot size adjusted to achieve approximately 30,000 CPS with a process time of 3.2 µsec at 25KV. A spectrum from 0 to 10.24 KeV is collected and calibrated using the EDS detector calibration software.

18.5.1.1.1.1 If the calibration fails, attempt again. If the calibration still fails, then call ASPEX service.

18.5.1.1.2 During automated GSR runs and prior to analyzing instrument support samples the centroids of these peaks will be monitored. The Cu Kα centroid should be 8.04 ±.03 KeV. The Cu Lα centroid should be 0.93±.03 KeV. FWHM of Cu Kα will also be monitored during the automated run. It should not exceed 170 eV.

18.5.1.1.2.1 If multiple instrument support runs are performed on the same day the Cu centroid values and the EDS resolution need only be checked before the first analysis of the day.

COPYRIGHT © 2023

18.5.1.1.3 A hard copy of the QC data collected during automated GSR runs and instrument support analysis will be kept in a QC notebook.

VIRGINIA DEPARTMENT OF FORENSIC SCIENCE

18.6 SEM-EDS Primer Residue Kit – QC

18.6.1 Prior to the manufacture of the PR kits a sample of the carbon tape to be used is analyzed to ensure no primer residue particles are present. Inform the manufacturer that the tape is acceptable so they may begin production of the kits. If the tape is not acceptable, request that the manufacturer send another tape sample for testing.

18.6.2 Each box of kits from the manufacturer must have a lot number associated with it. Do not accept the kits for testing without a lot number.

18.6.3 Select 1% of the kits received from the manufacturer for predistribution testing.

18.6.3.1 Inspect the kits to ensure all components are present.

18.6.3.2 Visually inspect the sample stubs. The stubs should be completely covered with carbon conductive tape.

18.6.3.3 Run an automated primer residue analysis on one sample from each kit to ensure no primer residue particles are present.

18.6.3.4 If all of the above checks pass, then inform the DFS Stockroom that the Primer Residue kits are available for distribution. Otherwise, do not release the kits for distribution.

18.6.4 The QC'd kits are retained and used as negative controls for automated primer residue runs.

UNCONTROLLED COPY

19 X-RAY POWDER DIFFRACTOMETER (XRD)

19.1 Overview

The QC checks will be performed prior to using the instrument for casework. A sample log will be maintained that includes at a minimum the date, initials of the examiner, the FS Lab# or other identifying information. Another log will be maintained that includes any maintenance performed, calibration check data, the date, and initials of the examiners.

19.2 Day-of-Use QC

19.2.1 An alumina standard (NIST reference standard) is run on the day of use prior to case work. If the Alumina Peak Check has been previously performed during the given calendar month, the Alumina Peak Check does not need to be redone. The intensity in counts per second and the d-spacings are recorded at generator settings of 45 *kV* and 40 *mA* for the 43.35 and 76.86 peaks. The values obtained at these two angles must fall within 0.03 of these stated values for the instrument to be used in casework. If values fall outside this range, do not use the instrument for casework. Call a service technician. When intensity values for the 43.35 peak and the 76.86 peak fall below 1400 counts per second and 850 counts per second respectively, the x-ray tube must be replaced.

19.2.2 A silicon dioxide (SiO_2) reference is run on the day of use prior to case work. The intensity in counts per second and the *d*-spacings are recorded at generator settings of 45 *kV* and 40 *mA* for the 26.63 peak in SiO_2. The value obtained at this angle must fall within 0.03 minutes of the stated value for the instrument to be used in case work. If values fall outside this range, do not use the instrument for casework. Call a service technician. The intensity in counts per second is compared to the values previously recorded for each recent day of use. If the operator notes a sudden decrease in intensity or questions these comparative values, the alumina standard should be run.

19.2.3 Resolution is checked by running a silicon dioxide (SiO_2) reference at generator settings of 45*kV* and 40*mA*. Enhancement of the 67° - 69° range of the SiO_2 pattern should reveal five distinguishable peaks. If five distinguishable peaks are obtained, then a check mark is placed in the appropriate column on the log sheet. If the five peaks are not distinguishable, do not use the instrument for casework. Call a service technician.

19.3 Instrument Conditions

19.3.1 The standard method with instrument conditions and settings is:

Panalytical Empyrean
Goniometer: Theta/Theta
Generator: Spellman
X-ray tube: Cu
Used radiation: K-Alpha
Detector: X'Celerator

Measurement program: Explosives

Start angle (°2Theta):	5
End angle (°2Theta):	75
Step size (°2Theta):	0.0083556
Time per step(s):	1.905
Generator kV:	45.0
Generator mA:	40.0

19.3.2 An XRD Conditions Sheet denoting any modification(s) is required for case files in which the above standard method was not used.

COPYRIGHT © 2023 VIRGINIA DEPARTMENT OF FORENSIC SCIENCE

UNCONTROLLED COPY

20 REPORTING GUIDELINES

20.1 Overview

Report (CoA) wording examples are included in the individual sections of this manual. However, given the diversity of evidence and requests considered by Trace Evidence these generally provide a framework to follow. The information herein is applicable to all Trace Evidence subdisciplines and examinations.

20.2 Reported Item descriptions shall be consistent with the submitting agency's description unless it requires clarification, correction, is too long, or has been reported previously. Item descriptions shall be identical in all reports within a single case file.

20.2.1 Clarification may be necessary to ensure the unambiguous interpretation of report results. For example, right/left vehicle sides may be replaced with driver/passenger sides.

20.2.2 Item descriptions for primer residue kits are generally formatted as "One (1) primer residue kit from {name/source}".

COPYRIGHT © 2023

20.2.3 For clarification, Item descriptions for control cans submitted with ignitable liquid evidence may be described as "Control can".

20.2.4 Pursuant to QM ¶ 14.6.7.1, when there is a significant difference between the Item submitted for testing and the description provided by the customer, customer consultation with further instructions is required before proceeding with analysis. Given the nature of Trace Evidence and the condition of evidentiary samples (trace amount, fragility, presence of damage, etc.), there are instances where the Item description differs from the evidence submitted. Examples:

VIRGINIA DEPARTMENT OF FORENSIC SCIENCE

RFLE Description	Evidence as Determined by Analysis
Hair	A fiber or plant material
Black paint	Dark blue paint
Specific color/type of smear	Differs in color and/or material
Number of broken pieces	Number is less or more due to breakage, packaging, etc.

Differences that require expertise or instrumentation (including, but not limited to, magnification and optimal lighting conditions) to distinguish, do not require consultation with the customer prior to proceeding with analysis.

20.3 When drafting report wording for evidence types not listed or when specific examples do not appear for a particular type of evidence, look first to existing wording in the other sections that may be applied to the current situation.

20.4 Reports may not use non-specific terms (e.g., "consistent with", "similar to", "indicative of", or "characteristic of") without qualification (to include, for example, "*physically* and *chemically* indicative of…") or stating shared properties.

20.5 The laboratory analysis conducted and/or instrumentation used for examination will be included in the report. This information may be summarized and will appear only once if all items are examined using the same methods and/or instrumentation. Otherwise, mention those used for each item separately.

Item _____ was examined visually and using [stereomicroscopy, polarized light*, polarized light microscopy (PLM), compound microscopy, comparison microscopy, fluorescence microscopy, a pH meter, a balance, a digital caliper, an ignition test, a multimeter, microchemical tests, ultraviolet light (UV), Microspectrophotometry (MSP), Fourier Transform Infrared Spectrophotometry (FTIR), Gas Chromatography (GC), Gas Chromatography-Mass Spectrometry (GC-MS), Ion Chromatography (IC), X-Ray Diffraction (XRD), Scanning Electron Microscopy-Energy Dispersive X-Ray Spectrometry (SEM-EDS), and Glass Refractive Index Measurement System (GRIM3)].

UNCONTROLLED COPY

20.5.1 "Polarized light" is appropriate for inclusion for usage of a polarizing stereomicrosope, a polarizing ring light attachment on a stereomicroscope, and/or polarizing films.

20.6 See the Quality Manual ¶ 16.2.13 – 16.2.14 for report wording specific to terminations, evidence disposition statements, and dates of testing.

20.6.1 The method deviation/addition/exclusion administrative statement (QM ¶ 16.2.14) is not required for report wording or control can deviations.

20.7 Circumstances or the condition of Items that affect the results of testing shall be included in the report.

20.7.1 Fire Debris examples:

20.7.1.1 Pinholes due to rust were present in the metal can containing Item 1; therefore, it was not airtight prior to testing. It should be noted that ignitable liquids are volatile, and airtight packaging is required to prevent loss.

COPYRIGHT © 2023

20.7.1.2 The packaging containing Item 1 was not airtight. It should be noted that ignitable liquids are volatile and airtight packaging is required to prevent loss.

20.7.1.3 Item 1 contained mold. Mold is known to cause degradation of ignitable liquids over time.

OR

VIRGINIA DEPARTMENT OF FORENSIC SCIENCE

Item 1 contained mold which is known to cause degradation of ignitable liquids over time.

20.7.1.4 Item 2 contained soil. Degradation of ignitable liquids is known to occur in soil over time.

OR

Item 2 contained soil, in which degradation of ignitable liquids is known to occur over time.

20.7.1.5 The Item 1 extract contained gasoline with indications of degradation. Item 1 contained soil. Degradation of ignitable liquids is known to occur in soil over time.

20.7.2 Paint example: It should be noted that the recovery of paint particles may have been impacted due to the condition of the Item 5 shorts (e.g., wet, presence of biological material and apparent mold).

20.7.3 SEM-EDS example: The Item 3 samples were carbon coated prior to analysis due to debris noted on the surface.

20.8 If based on the analysis of one or more items, the remaining items will not be analyzed use:

20.8.1 Based on the above results, Items _____ and _____ were not analyzed.

20.8.2 Based on the above results, no further analysis was conducted on Item _____.

20.9 For Comparisons:

20.9.1 For disassociations, the reason for elimination (differences in color, physical properties, optical properties, chemical properties, chemical composition, fluorescence, etc.) shall be included in the conclusion.

20.9.1.1 Based on the particles examined, the particles removed from Item _ could not be associated with the Item _ particles due to differences in (list the appropriate properties) (**Exclusion/Elimination**).

UNCONTROLLED COPY

20.9.1.2 Item _____ could not be associated with Item _____ due to differences in (list the appropriate properties) (**Exclusion/Elimination**).

20.9.2 When comparisons result in an inability to either associate or disassociate the Items, an Inconclusive conclusion is appropriate. The reason(s) causing an inconclusive result shall be explained.

20.9.2.1 Although there are some similarities between Items 1 and 2, the (size, quantity, or condition) of Item 1 prohibited the complete comparison of optical or chemical properties. Therefore, no meaningful conclusion can be reached (**Inconclusive**).

20.9.2.2 Item 2 (questioned) and the Item 3 (known) possess similar characteristics but also exhibit some differences. It cannot be determined whether these differences were due to the condition of Item 2 or because Item 2 is from a different source other than Item 3. Therefore, based on the samples examined, no meaningful conclusion could be reached (**Inconclusive**).

20.9.3 When there is an association, the results of the comparison and an appropriate conclusion statement shall be reported. Additional explanation to justify the chosen level of the association shall also be included.

COPYRIGHT © 2023

20.9.3.1 RESULTS:

20.9.3.1.1 The use of the term "consistent" must be accompanied by what the materials were "consistent" in (e.g., physical properties, chemical properties). This term is generally used when there are no unexplainable differences in the testing conducted on the known and questioned samples.

VIRGINIA DEPARTMENT OF FORENSIC SCIENCE

20.9.3.1.2 It is recognized that there may be instances when, based on the data, the term "similar" may be more appropriately substituted for "consistent". The reason for the use of the term "similar" in lieu of "consistent" must be explained in the report.

20.9.3.1.3 There may be an occasion when these terms are used in the same sentence.

20.9.3.2 CONCLUSIONS:

20.9.3.2.1 Based on the (materials) examined, it was concluded that the Item _____ originated from either the Item _____ or another source with the same physical and chemical properties.

20.9.3.2.2 Based on the Items examined, it was concluded that the Item 1 originated from either Item 2 or a different source manufactured in the same manner.

20.9.3.2.3 Based on the pieces examined, it was concluded that Item 1 originated from either the source represented by Item 2 or a different source manufactured in the same manner.

20.9.4 An association level will be assigned and the following "Terminology Key for Comparative Examinations" shall be present and appropriately formatted on the Certificate of Analysis above the "Dates of Testing":

TERMINOLOGY KEY FOR COMPARATIVE EXAMINATIONS:

- **Level I - Physical/Fracture Match:** Physical Fit is reached when the items that have been broken, torn, or separated exhibit physical features that correspond/re-align in a manner that is not expected to be replicated.
- **Level II - Association with Highly Discriminating Characteristics:** An association in which items could not be differentiated based on the examinations conducted. Therefore, the possibility that the items came from the same source cannot be eliminated. Additionally, the items share

UNCONTROLLED COPY

unusual characteristics that would rarely be expected to occur in the relevant population. This is the highest degree of association that can be determined in the absence of a Physical Fit.

- **Level III - Association with Discriminating Characteristics:** An association in which items could not be differentiated based on the examinations conducted. Therefore, the possibility that the items came from the same source cannot be eliminated. Other items have been manufactured or could occur in nature that would also be indistinguishable from the submitted items and could be encountered in the relevant population. The analytical techniques used in the analysis of these items can provide high levels of discrimination among natural and manufactured materials. This is considered a high degree of association.
- **Level IV - Association with Limitations:** An association in which items could not be differentiated based on the examinations conducted. Therefore, the possibility that the items came from the same source cannot be eliminated. As compared to the categories above, this type of association has decreased evidential value. For example, the items are more commonly encountered in the relevant population, minor variations were observed, or a complete analysis was not performed due to limited characteristics or sample size. Minor variations, for certain types of examinations, could be due to factors such as contamination of the sample(s) or having a sample of insufficient size to adequately assess heterogeneity of the entity from which it was derived.
- **Inconclusive:** No conclusion could be reached regarding an association or an elimination between the items.
- **Exclusion with Limitations:** The item exhibits differences from the comparison sample that support that it did not originate from the source, as represented by the comparison sample. An Exclusion/Elimination conclusion was not reached due to limiting factors, such as possible natural or manufactured source variations.
- **Exclusion/Elimination:** The items exhibit differences that demonstrate the items did not originate from the same source.

COPYRIGHT © 2023
VIRGINIA
DEPARTMENT
OF
FORENSIC SCIENCE

20.9.5 See section 5 for Physical Fit report wording.

20.9.6 Generally, in instances where two or more associations are being reported (e.g., cross transfers or multiple transfers), each association and appropriate level should be reported separately. An additional "Combined Conclusion" may be included which considers the overall significance of transferred materials, however, this will not include an assigned level.

20.9.6.1 It is considered unlikely/remote/extremely remote that the interchange of or materials described above occurred in any manner other than the contact of these two objects.

20.9.6.2 Given the associations described above, it is considered unlikely/remote/extremely remote that Item ___ originated from any source other than the source represented by Item ___.

20.9.6.3 Report Wording Example:

Foreign red cotton fibers were recovered from the Item 3 paint sample. These red cotton fibers recovered from Item 3 were consistent with the red cotton fibers composing the Item 10 T-shirt in physical, chemical, and optical properties. Based on the fibers examined, it was concluded that these Item 3 red cotton fibers originated from either the Item 10 T-shirt or another source of fibers with the same physical, chemical, and optical properties (**Level III – Association with Discriminating Characteristics**). This type of conclusion was reached because other textiles like Item 10 were produced and fibers produced with the same properties (type, color, microscopic characteristics, etc.) from other sources would also be indistinguishable from these fibers. It should be noted that the techniques used in this comparative analysis can typically distinguish different fibers.

One multilayered black paint particle was recovered from the Item 10 clothing. This Item 10 multilayered black paint particle and the Item 3 multilayered black paint were consistent in colors, textures, types, layer sequence, and chemical compositions. Based on the particles

UNCONTROLLED
COPY

examined, it was concluded that the paint particle recovered from Item 10 originated from either the source represented by Item 3 or different sources painted in the same manner (**Level II – Association with Highly Discriminating Characteristics**). This type of conclusion was reached because the multilayered black paints in Items 3 and 10 exhibited characteristics that are atypical of original equipment manufacturer (OEM) paints. Due to the presence of five automotive repaint layers, it is unlikely that even other vehicles produced at the same manufacturing plant in approximately the same time frame would also be indistinguishable. Furthermore, any other vehicles painted in the same distinctive manner would have to be damaged and missing paint in order to be considered viable sources of the questioned paint.

COMBINED CONCLUSION:

It is considered remote that the interchange of fibers and paint described above occurred in any manner other than the contact of these two objects.

20.10 References

COPYRIGHT © 2023

20.10.1 OSAC, Standard Practice for Interpretation and Report Writing in Forensic Comparison of Trace Materials: Draft Document 03/31/2020. <https://www.nist.gov/system/files/documents/2020/04/02/ChSAC-Mat_Interpretation_Document_MARCH2020_0.pdf>

VIRGINIA
DEPARTMENT
OF
FORENSIC SCIENCE

UNCONTROLLED
COPY

21 QUALITY ASSURANCE

21.1 Introduction

21.1.1 The purpose of this section is to provide a uniform Quality Assurance (QA) Program for the Section for equipment and supplies that are not mentioned in previous sections. It is to establish a baseline or reference point of reliability and system performance.

21.1.2 TE examinations typically are comprised of identifications and/or comparisons between known and questioned samples. Certified reference materials are currently not available for most comparisons or identifications, therefore, commercially available products and reference materials are purchased as necessary.

21.1.2.1 Traceability has been established for certain measuring equipment including: balances, check weights, digital calipers, gauge blocks, and Eppendorf variable pipettes. These measuring devices shall be calibrated by an outside vendor that is accredited to ISO/IEC 17025 and whose scope of accreditation covers the calibration performed.

COPYRIGHT © 2023

21.1.3 It is expected that the examiner will report any unacceptable or anomalous behavior of any analytical systems immediately to either their Section Supervisor or the individual primarily responsible for a particular instrument. It is further expected that appropriate measures which ensure resolution of the issue will be carried out ASAP and that these will be properly documented.

VIRGINIA DEPARTMENT OF FORENSIC SCIENCE

21.2 Balances

21.2.1 Balances shall be checked prior to use in casework, however, if the balance has been previously checked during the given month, the balance does not need to be re-checked. The calibration check is performed using calibrated, traceable check weights and is dependent upon the range of the balance. Record the weights in the Balance QC Log.

21.2.1.1 Use the following check weights depending on balance class:

21.2.1.1.1 4-place analytical balance:

0.1000 (± 0.0003) gram
5.0000 (± 0.0005) gram
100.0000 (± 0.0010) gram

21.2.1.1.2 3-place toploading balance:

1.000 (± 0.002) gram
10.000 (± 0.005) gram
100.000 (± 0.005) gram

21.2.1.1.3 2-place toploading balance:

5.00 (± 0.02) grams
100.00 (± 0.03) gram
1000.00 (± 0.05) gram

21.2.1.2 The calibration check data is recorded on the *Balance QC Log* and is kept with each balance. The person performing the calibration check shall initial and date the form.

21.2.1.3 If a result from the calibration check is outside of the acceptable range, ensure that the balance is level and free of debris, and recheck the balance a second time.

UNCONTROLLED COPY

21.2.1.4 If a result is outside of the acceptable range after rechecking, the balance shall immediately be taken out of service until maintenance and/or calibration are performed by an approved vendor.

21.2.1.5 Weights used to check balance accuracy shall be re-certified every three years by an ISO/IEC 17025 accredited vendor whose scope of accreditation covers the certification performed.

21.2.1.6 Balances shall be calibrated annually by an outside vendor that is accredited to ISO/IEC 17025 and whose scope of accreditation covers the calibration performed. Record the service call on the *Balance QC Log* that is kept with each balance.

21.2.2 Service receipts and miscellaneous balance maintenance comments are retained with QA records that are kept with each balance.

21.2.3 An examiner may use a calibrated balance from another Section in the Department. The examiner's case notes will reflect the identification of the balance and its location, for example: Controlled Substances (DX) Section, Sartorious, DFS XXX.

COPYRIGHT © 2023

21.2.4 When recording weights obtained on a TE balance, the examiner shall record the weight to the readability of the balance. Weights shall not be rounded.

21.2.5 The Department has developed processes and collected data for the Uncertainty of Measurement program for the DX Section.

VIRGINIA DEPARTMENT OF FORENSIC SCIENCE

21.2.5.1 When reporting critical weights in a Certificate of Analysis, use a balance in the DX Section where the Uncertainty of Measurement (UoM) has already been determined. Complete an Instrument Support (IS) Request Form and arrange with an examiner in the DX Section to conduct the weighing. The TE examiner will retain custody of the evidence during the weighing process. Ensure that the identifying information for the balance and the determined weight(s) are recorded on the IS form by the DX examiner. In addition, the DX examiner shall complete the Controlled Substances Weighing Worksheet. The TE examiner shall include the Support Request Form and Weighing Worksheet in the case file and report UoM as described below. Refer to section 33 of the Controlled Substances Procedures Manual for UoM information and reporting requirements.

Reporting Example:

Item 1 weighed 25.93 ± 0.05 grams. Measurement uncertainty of weight measurements is reported at a 95.45% level of confidence.

21.2.5.2 It is rare that critical weights would be necessary. An example is when the weight of explosive powders is necessary to be reported for a Federal prosecution.

21.3 Chemicals and Reagents

21.3.1 The minimum acceptable quality level of chemicals and reagents (non-critical) has been determined through experience and these appear in each applicable section of this manual. The supplier of these chemicals and reagents is any supplier that can provide the specified quality level that meets the criteria for the specific extraction or test. Generally speaking, pre-approved manufacturers/vendors/suppliers are:

- Alltech Associates (Grace – Discovery Sciences)
- J.T. Baker
- Burdick & Jackson
- Fisher
- Mallinckrodt
- Sigma-Aldrich and its subsidiaries
- VWR

UNCONTROLLED COPY

- Government Scientific
- AccuStandard
- Cerilliant

21.3.1.1 The Section Supervisor, or in their absence the Chemistry Program Manager, will be responsible for approving the purchase of a chemical or reagent from a manufacturer/vendor/supplier that is not listed above.

21.3.2 Chemicals and solvents used in qualitative reagents should be of at least ACS reagent grade.

21.3.3 Solvents used for extractions or to dissolve samples or standards or as standards should be a high quality, low residue solvent (e.g., HPLC grade, OMNISOLV, OPTIMA).

21.3.4 Water used in reagent preparation or as an extraction solvent should be either deionized (DI) or reverse osmosis (RO).

21.3.5 Composition of prepared quality assurance check mixtures including, but not limited to, PCS and OCS shall be documented.

COPYRIGHT © 2023

21.3.6 All chemicals and commercial reagents are labeled when received with the date received and the initials of the individual receiving them, and again when opened.

VIRGINIA DEPARTMENT OF FORENSIC SCIENCE

21.3.6.1 All chemicals and commercial reagents are placed onto an inventory list maintained either within the Section or within the laboratory.

21.3.6.2 Working bottles of chemicals and commercial reagents will be labeled at a minimum with the name of the chemical or commercial reagent, the manufacturer and lot number and the date dispensed into the working bottle.

21.3.6.3 All chemicals and commercial reagents are replaced when they fail to perform adequately under controlled conditions. Chloroform, acetone, sulfuric acid, nitric acid, and hydrochloric acid dispensed into working bottles for microchemical tests will be replaced approximately every three months.

21.3.7 All bottles of stock reagents prepared in-house must be labeled with the identity of the reagent, the date of preparation and the initials of the person who prepared the reagent. Reagent bottles for individual use must be labeled with the identity of the reagent and the preparation date.

21.3.7.1 The *TE Color Test Reagent Preparation Log* shall be used to record reagent preparation. This will include the quality check as indicated to ensure that the reagent is functioning properly when it was prepared.

21.3.7.1.1 It is acceptable to make final volumes different from those indicated on a *Preparation Log* as long as the amount of each component is recorded.

21.3.7.2 A stock bottle of reagent may continue to be used until the aliquoted reagent fails the quality check. If the quality check fails, it is the examiner's responsibility to immediately dispose of the remaining reagent and to communicate this to all examiners with working bottles of the reagent.

21.3.7.3 After the initial preparation, reagents will be checked at least once per each case analyzed. The results of the QC check are recorded in the case notes. Do not use the reagent if the quality check fails. A notation such as "QC ✓" is sufficient to document the reagent reacted as expected.

21.3.8 All other reagents used in non-routine examinations, such as general chemical type cases, are prepared as necessary and are tested with knowns and blanks, the results of which are recorded in the case file notes.

UNCONTROLLED COPY

21.3.8.1 The *Department Reagent Worksheet* shall be used to record reagent preparation if the reagent will be retained for future use.

21.3.8.2 The *Department Reagent Worksheet* is not necessary for a single-use reagent.

21.3.9 Test strips are checked with appropriate standards and results are recorded in case notes. Test strips may continue to be used past their stated expiration date as long as the QC check is positive.

21.3.10 Storage Requirements

21.3.10.1 Store Silver Nitrate reagent in the dark or in an amber bottle.

21.3.11 Reagent Recipes for Routine Examinations

Aqueous Aniline Sulfate:	Dissolve 5.0 g aniline sulfate in 100 ml deionized water. (Ref. 2)
Barium Chloride:	Dissolve 5.0 g barium chloride in 100 ml deionized water (5% solution). (Ref.1)
Brucine:	Dissolve 5.0 g brucine sulfate (brucine sulfate 7-hydrate) in 100 ml concentrated sulfuric acid. (Ref. 1)
Diphenylamine:	Dissolve 0.68 g diphenylamine in 45 ml concentrated sulfuric acid. Place in ice bath and cautiously add 22.5 ml glacial acetic acid. (Ref. 6)
LeRosen:	Mix 75 ml of concentrated sulfuric acid in 1.5 ml of 37% formaldehyde. (Ref. 3, pp.137)
1-Naphthol:	Dissolve 15 g 1-naphthol in 100 ml of ethanol (Ref. 2)
Nessler's:	Dissolve 20 g potassium hydroxide in 50 ml deionized water. Dissolve 10 g mercuric iodide and 5 g potassium iodide in 50 ml deionized water. Mix together. (Ref. 4)
2N Potassium Hydroxide:	Dissolve 11.2 g potassium hydroxide in 100 mL methanol.
Silver Nitrate:	Dissolve 3.75 g silver nitrate in 75 ml deionized water. (Ref. 1)
Sodium Hydroxide:	2.0 N: Dissolve 6.0 g NaOH in 75 ml deionized water. (Ref. 4, pp. 57, 64)
Saturated Sodium Hydroxide:	Dissolve 10g NaOH in 100 ml deionized water (Ref. 2)
Sulfuric Acid (75%):	Mix 56.25 ml concentrated sulfuric acid into 18.75 ml deionized water. (Ref. 7)
Triphenyl Selenium Chloride:	Saturated solution in 60 ml deionized water. (Ref. 5, p.184)

21.3.12 Reagent Recipes for Non-Routine Examinations

Fehling's:	Dissolve 7.5 g cupric sulfate in 100 ml deionized water. Dissolve 35 g sodium tartrate and 25 g potassium hydroxide in 100 ml deionized water. Mix equal volumes of each solution. (Ref. 3, pp.131)

COPYRIGHT © 2023 VIRGINIA DEPARTMENT OF FORENSIC SCIENCE

UNCONTROLLED COPY

Hypochlorite Ion Test Reagent: Dissolve 2.0 g phenol, 0.01 g sodium nitroprusside, and 1 g sodium hydroxide into 17 mL of deionized water. (Ref. 5, p. 336).

Nitron: Dissolve 3.75 g nitron (diphenylenedianilohydrotriazole) in 75 ml of 88% formic acid. (Ref. 1)

Triphenyltetrazolium Chloride: Dissolve 0.38 g triphenyltetrazolium chloride in 75 ml deionized water. (Ref. 3, pp. 338)

21.3.13 References

21.3.13.1 Parker, R.G., Stephenson, M.O., McOwen, J.M, Cherolis, J.A., "Analysis of Explosives and Explosive Residues. Part 1: Chemical Tests", *Journal of Forensic Sciences*, 1975, 20 (1), pp. 133-140.

21.3.13.2 "Spot Tests, Systematic Analysis Of Low Explosives", Bureau of Alcohol, Tobacco, and Firearms, Rev 6/88.

21.3.13.3 Anger, V., and Feigl, F. Spot Tests In Organic Analysis 7th ed., Elsevier Publishing Company: Amsterdam, The Netherlands, 1966.

21.3.13.4 Jungreis, Ervin; "Spot Test Analysis, Clinical, Environmental, Forensic, and Geochemical Applications", Volume 75, 1985, pp.57-58.

21.3.13.5 Anger, V., and Feigl, F., Spot Tests in Inorganic Analysis, 6th ed., Elsevier Publishing Company: Amsterdam, The Netherlands, 1972.

21.3.13.6 Thornton, John I., "Forensic Paint Examination," Forensic Science Handbook, Volume 1, Prentice-Hall, Inc., 1982, p.550.

21.3.13.7 Hall, David, "Practical Fiber Identification", Textile Engineering Department, Auburn University, 1976, p.36.

COPYRIGHT © 2023
VIRGINIA DEPARTMENT OF FORENSIC SCIENCE

21.4 Critical Supplies

21.4.1 Critical supplies used within the Section include carbon disulfide and pentane used for fire debris extractions and primer residue kits which are manufactured to DFS specifications and provided to law enforcement agencies throughout the Commonwealth.

21.4.2 Generally speaking, suppliers of carbon disulfide and pentane which have previously been checked and deemed to be acceptable are those which are used for future orders. Pre-approved manufacturers/vendors/suppliers are: Fisher, J.T. Baker, Burdick & Jackson, Mallinckrodt and VWR.

21.4.2.1 As a check, an appropriate amount of solvent from each lot is concentrated by evaporation and analyzed by GC-MS. The resulting data is maintained in an appropriate location within the Section. Do not use the solvent until this check is acceptable (no major interfering peaks in the region of interest). See Section 4.1.13 for more information regarding the quality checks.

21.4.3 Primer residue kits are only ordered through the company who has been awarded the contract for their manufacture. The tape used to prepare the kit sampling devices as well as the completed kits are checked prior to release for distribution. See Section 18.6.

21.4.4 Standards used for identification in casework are considered critical supplies and shall be purchased from manufacturers/vendors/suppliers approved by the Chemistry Program Manager.

21.4.4.1 The following manufacturers/vendors/suppliers are pre-approved:

UNCONTROLLED COPY

- Fisher
- Mallinckrodt
- Pierce Chemical
- Sigma-Aldrich and its subsidiaries
- VWR

21.4.4.2 Standards used for identification purposes are verified each time an examiner analyzes them with case evidence.

21.4.4.2.1 It is the examiner's responsibility to ensure that the standard being analyzed agrees with known published data or that the data is consistent with the unique compound represented from both a chemical and data interpretation perspective.

21.4.4.3 The Section Supervisor, or in their absence the Chemistry Program Manager, will be responsible for approving the purchase of a chemical or reagent from a manufacturer/vendor/supplier that is not listed above.

COPYRIGHT © 2023

21.4.4.4 All standards used for identification purposes will be identified to a unique source to include at a minimum the manufacturer and lot number of the material.

21.5 Eppendorf Pipettes

VIRGINIA DEPARTMENT OF FORENSIC SCIENCE

21.5.1 The Section has a number of fixed volume Eppendorf pipettes that are not used for critical measurements in analytical work. These pipettes do not require a calibration check of the accuracy and precision of the volume that they dispense.

21.5.2 The Eppendorf variable pipettes are used in preparing standards and samples for analysis by Ion Chromatography (IC). Any of these solutions or dilutions is meant to only be comparative in nature on a semi-quantitative basis.

21.5.2.1 Annually – Eppendorf variable pipettes shall be calibrated by an outside vendor that is accredited to ISO/IEC 17025 and whose scope of accreditation covers the calibration performed.

21.5.2.2 As Needed – If an Eppendorf variable pipette has been dropped or otherwise damaged, the calibration of the pipette will be checked using graduated Rainin Pipette RT tips. Verify the pipetting volumes of the pipette as specified in the Pipette Verification Table below. The pipette tips are guaranteed to be accurate to ± 3% at the specified reference lines. Should the pipette be visibly incorrect according to the reference line, the pipette will be sent to the manufacturer for repair.

21.5.2.3 As Needed – Clean and check the sealing system as outlined in the pipette's instruction manual.

21.5.2.3.1 Once the pipette has been reassembled after cleaning, conduct a calibration check using graduated Rainin Pipette RT tips. Verify the pipetting volumes of the pipette as specified in the Pipette Verification Table below. The pipette tips are guaranteed to be accurate to ± 3% at the specified reference lines. Should the pipette be visibly incorrect according to the reference line, the pipette will be sent to the manufacturer for repair.

UNCONTROLLED COPY

Pipette Verification Table

Pipette	Tip RT-200F			Tip RT-200		
10-100	10 µL	50 µL	100 µL			
100-1000				100 µL	500 µL	1000 µL

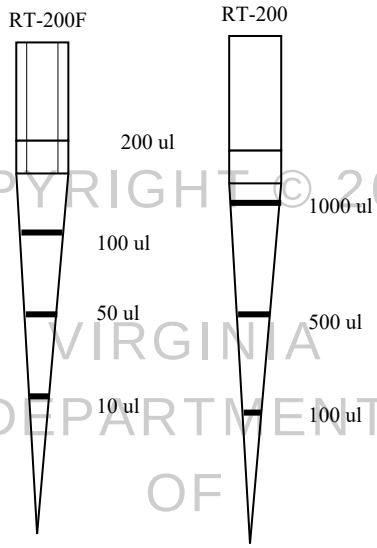

COPYRIGHT © 2023
VIRGINIA
DEPARTMENT
OF
FORENSIC SCIENCE

21.6 Digital Calipers

Digital calipers shall be calibrated every three (3) years by an outside vendor that is accredited to ISO/IEC 17025 and whose scope of accreditation covers the calibration performed. Gauge blocks used to check digital caliper accuracy shall be re-certified every three (3) years by an ISO/IEC 17025 accredited vendor whose scope of accreditation covers the certification performed.

21.6.1 Digital calipers shall be checked prior to use in casework, however, if the caliper has been previously checked during the given month, the caliper does not need to be re-checked. Calibration checks are made with the following four (4) certified steel standard gauge blocks: 0.050”, 0.500”, 1.000” and 2.000”.

21.6.2 The measured values are recorded on a log sheet which is stored with the digital calipers.

21.6.3 The measured values shall be within: ± 0.001”.

21.6.4 If the values are outside the appropriate range for a given gauge block, then measure again. If the values are still outside the appropriate range, then the digital caliper must be sent to a vendor that is accredited to ISO/IEC 17025 and whose scope of accreditation covers the calibration performed for recalibration.

21.6.5 If any digital caliper is dropped or otherwise subjected to extremes of temperature, shock or contamination, then the calibration will be checked prior to use in casework measurements.

21.7 Microscopes

21.7.1 All the microscopes used within the Section are cleaned and serviced every two years, and as needed. A log documenting cleaning and service is maintained.

UNCONTROLLED
COPY

21.7.2 Lenses are cleaned during use as needed. These include condenser lenses, objective lenses and eyepieces. Miscellaneous microscope maintenance comments are recorded as appropriate.

21.7.3 Setting up Köhler illumination is one of the most widely accepted techniques of ensuring that a microscope is correctly aligned, that it has high intensity homogenous illumination and that it is focused correctly. It should be noted that this does not apply to stereomicroscopes.

21.7.3.1 Depending on a particular microscope and its design, setting up Köhler illumination may be possible in full or only in part. Many modern microscopes are fitted with fixed light sources, which mean that it is not possible to center or focus the image of the lamp filament like in conventional microscopes. Also, many modern microscope designs include one or more diffuser filters between the lamp and the condenser. In such cases, even if the microscope is fitted with an adjustable lamp, an image of the filament cannot be seen. In these microscopes only partial Köhler illumination can be obtained.

21.7.3.2 Köhler illumination is a multi-step process, which should be performed or checked every time the microscope is used. Some of the steps should even be checked more often while working.

COPYRIGHT © 2023

21.8 pH Meter

21.8.1 The pH meter is calibrated prior to each use using a 3-point calibration method. Refer to the individual pH meter's instrument manual for these procedures.

VIRGINIA DEPARTMENT OF FORENSIC SCIENCE

21.8.1.1 The reference buffers chosen should bracket the expected pH value range of the sample(s) to be analyzed, if possible.

21.8.1.2 The electrode slope must be within the range: 92%-102%. While this is the range cited for 2-point calibrations, it will also be applied here to the 3-point calibration method.

21.8.1.3 Record the pH values on the pH meter calibration log sheet. The pH values must be within ± 0.1 units of the pH value stated on each individual reference buffer's labeling.

21.8.1.4 If the calibration values are within the accepted limits, the pH meter is ready to use for samples.

21.8.1.5 If the calibration values are not within the accepted limits, rerun and/or troubleshoot as appropriate.

21.8.2 Rinse the electrode with deionized water or the buffer, standard or sample, as appropriate.

21.8.2.1 Inspect the electrode for scratches, cracks or salt crystal deposits prior to each use. Clean or replace the electrode in response to the discovery of these deficiencies, as appropriate.

21.8.2.2 Do not wipe the pH electrode glass bulb.

21.8.2.3 Short term storage is defined as being less than one week.

21.8.2.4 For short term storage: Store in an electrode storage bottle containing pH storage solution or in a covered bottle of filling solution. Covered glassware containing sufficient storage or filling solution to cover the sensing element may be used.

21.8.2.5 For long term storage: Fill the reference chamber with filling solution and cover the fill hole. Put a few drops of pH storage solution into an electrode protective cap and cover the sensing element and reference junction. Alternatively, store in a covered bottle of filling solution. Some models require covering the sensing surface with the protective cap and storing dry.

UNCONTROLLED COPY

21.8.2.6 If the reference chamber dries out during storage, rinse with deionized water several times using a plastic pipette. Follow by rinsing several times with filling solution. Refill the reference chamber, cover the fill hole, and soak the electrode in storage or filling solution for at least one hour.

21.8.2.7 Do NOT store the electrodes in deionized water.

21.8.3 Reference buffers shall be replaced when they expire.

21.8.3.1 Choose pH buffers that are no more than three pH units or no less than one pH unit apart.

21.8.3.2 Keep the buffer bottle tightly sealed and free of contamination.

21.8.3.3 Do not reuse an aliquot of buffer or return it to the original bottle.

21.8.3.4 Pure water samples (e.g., deionized water blanks) may result in noisy electrode response and may require a long stabilization period particularly if used after a buffer with high ionic strength. The sample may also be contaminated if adequate rinsing is not performed.

COPYRIGHT © 2023

21.8.3.5 Refer to the pH meter instrument manuals for recommendations of good laboratory practices, correct applications, problem samples and troubleshooting.

VIRGINIA DEPARTMENT OF FORENSIC SCIENCE

21.9 Refrigerators and Freezers

21.9.1 At least once a week, check and record the temperatures on all refrigerators currently in use for storing evidence. If the temperature is outside its acceptable range (as indicated below), document in case file notes and immediately notify the Section Supervisor who will remedy this situation

21.9.1.1 For flammable refrigerators storing Fire Debris evidence, the temperature of the refrigerator should be 4.5º C or lower. Record the temperatures using the *Flammable-Materials Refrigerator Log*.

21.9.1.2 For non-flammable refrigerators, the temperature should be between 2-8º C. Record the temperatures using the *Refrigerator/Freezer Log Sheet.*

21.9.1.3 For evidence submitted frozen and that must be stored frozen, the temperature of the freezer should be below -10ºC. Record the temperatures using the *Refrigerator/Freezer Log Sheet.*

21.9.2 The thermometers used for the temperature check will be NIST traceable and their certificates stored with the temperature log. Thermometers shall be replaced prior to their calibration due date (typically every two years).

21.9.2.1 Refrigerator and/or freezer temperature records will be retained pursuant to the Library of Virginia Specific Schedule Number 778-001 (Quality Assurance: Program Accreditation 100272 series).

21.9.3 Some standards and reagents are labeled with specific storage temperatures and should be stored accordingly. Some reference materials and reagents last longer when refrigerated. Because all standards, reagents and reference materials are checked with each case, a check of the storage refrigerator/freezer temperature is not required.

21.10 Thermometers and Ovens

21.10.1 The temperature of ovens used in passive adsorption-elution fire debris extractions (charcoal strip) will be checked prior to use with casework and the value recorded on a log sheet kept with the ovens.

UNCONTROLLED COPY

21.10.1.1 Each oven should have its own external thermometer. The oven temperature should read 65º C ± 2.0º C. If the temperature does not read as specified, then the thermostat will be adjusted to obtain the correct temperature. The oven temperature will be re-read and this value recorded. If the correct temperature cannot be achieved, the oven will be removed from service until it can be repaired.

21.10.1.2 The thermometers used for the temperature check will be NIST traceable and their certificates stored with the oven log. Thermometers shall be replaced prior to their calibration due date (typically every two years).

21.10.1.3 Documentation shall be maintained with the oven log that associates the serial number of the NIST traceable thermometers with the corresponding oven.

21.10.2 Any maintenance or repair will be documented in a log kept with the oven.

21.10.3 Oven log(s) will be retained pursuant to the Library of Virginia Specific Schedule Number 778-001 (Quality Assurance: Program Accreditation 100272 series).

COPYRIGHT © 2023

21.11 Handheld UV Source

21.11.1 Perform a fluorescence QC check prior to using it for color observations in casework.

VIRGINIA DEPARTMENT OF FORENSIC SCIENCE

21.11.2 To verify proper operation of the UV source, perform the following fluorescence QC procedure:

21.11.2.1 Place a mark on a glass slide using a suitable fluorescent highlighter and record the resulting fluorescence in case notes or on an appropriate worksheet.

21.11.2.2 The prepared slide can be stored out of direct light and can be used for future QC checks. If the QC check fails, troubleshoot equipment and repeat the QC check. If the UV source fails to produce fluorescence on known fluorescent surfaces, take the UV source out of operation until suitable repairs are made.

21.11.3 For use in glass analyses, see the “Glass” section of this manual.

UNCONTROLLED COPY

22 COMMONLY USED ABBREVIATIONS

The following is a list of abbreviations commonly used by examiners in the Section. This list has been generated to assist in the interpretation of case file notes. While as comprehensive as possible, the list may not be complete. The abbreviations are appropriate written in either lower or upper case and they are appropriate with or without punctuation such as periods. It is the examiner's responsibility to ensure that there is no confusion in the note-taking when using abbreviations. Common symbols may also be used to represent their common context.

@	at
~ or ≈	approximately; equivalent or similar
Δ	change(s); change in; heat
⇒ or →	contains; containing; reaction goes to; taken to dryness
≠	does not equal; not same as
↑	high
↑↑↑	very, many, abundant
" "	labeling; anything enclosed in quotes is word for word from the package labeling
µ or µm	micron; micrometer (applies to microgram and microliter as well; a lower case u is equivalent)
µchems	microchems (microchemical tests)
µscopic	microscopic
- or θ	negative
‖	parallel
⊥	perpendicular
+ or ⊕	positive
↓	low
↓↓↓	very few, sparse
∴	therefore; thus
λ	wavelength
1,2,4-TMB	1,2,4-trimethylbenzene
1PS	phase separating filter paper (e.g., Whatman 1PS)
ACA	Assistant Commonwealth's Attorney
AH	animal hair
app	apparent
ASV	auto sampler vial
BC	bar code
B/E	back end
bf	body filler
bld	blood
BM	best match
BO	biaxially oriented
BPB	brown paper bag
BSE	backscattered electron
BX	box
CA	Commonwealth's Attorney
CB	call back
c/c	clear/colorless
Char	characteristic
CLP	one plastic container which contained one glass container which contained
C of A or CoA	Certificate of Analysis
comp	compensator
conc.	concentrated
cont.	container
conv. bag	convenience bag
conv. pkg.	convenience package
Cryst	crystalline
c.s. or c/s	cross section
CSD	County Sheriff's Department

COPYRIGHT © 2023
VIRGINIA DEPARTMENT OF FORENSIC SCIENCE

UNCONTROLLED COPY

CSO	County Sheriff's Office
ct	can't tell
D	dissolve
DC or (DC)	diamond cell
DF	decorative flake
dH2O or DI water	deionized water
dia.	diameter
dil	diluted
dk	dark
DPA	diphenylamine
DMF	dimethylformamide
d/t	due to
dws	deep welled slide
eff.	effervescence
EN, ENV	envelope
esc	escape
ext	extract
FA	falls apart
F/E	front end
FDCS	Fire Debris Check Sample
f/n or fn	fingernail(s), rtfn, ltfn = right/left fingernails
frag(s)	fragment(s)
fx'd	fractured
G	glass
H^+	acid
h	horizontal
H/F	hairs/fibers
H/F/K	hairs/fibers/known
hort.	horizontal
h/s	heat sealed
I	insoluble
i.d.	inner diameter
ID	identification
J chem.	section J chemical
K	known
LM	left message
LVM	left voice mail
lt	left or light
m	metallic
mag	magnification
MC	metal can
MCDC	microcompression diamond cell
med	medium
MEN	manila envelope
ME	Medical Examiner
MEO	Medical Examiner's Office
Meth	methamphetamine
mic	microscopy or microscope
Microchems	Microchemical tests
misc.	miscellaneous
mm	mounting medium
MO	monoaxially oriented
morph	morphology
m/s	microscope slide(s)
MT	empty
NCC	no color change
NCR	no color reaction

COPYRIGHT © 2023
VIRGINIA DEPARTMENT OF FORENSIC SCIENCE

UNCONTROLLED COPY

no CS	no controlled substances identified
NDF	no decorative flake
neg	negative
nm	nonmetallic
NNA	not necessary for analysis
NPF	no particles found
NR	no reaction
NSR	no significant reaction
o.d.	outer diameter
OOR	out of range (matchpoint out-of-range at given temp.)
o.p.	orange peel texture
PCS	Polar Check Sample
p	primer
PB	paper bag
PET	polyethylene terephthalate
pet. prod.	petroleum product
pkging	packaging
pl	plastic
PLB	plastic bag
poly	polyester
pos	positive
ppt.	precipitate
PR	primer residue
Pseudo	ephedrine/pseudoephedrine
Q	questioned
QNS	quantity not sufficient for analysis
rec'd	received
RI	refractive index
r/o	rule out
R_x	reaction
RXN	reaction
RT +	retention times positive for
rt	right
S	softens
S&S	softens and swells
S/	sealed _ (e.g., S/EN is a sealed envelope)
S's	suspect's
Scope	microscope
Sec J	section J chemical
sig	significant
sl	slight
SM	solid material
SP	smokeless powder
STD	standard
sub	submission
syn	synthetic
T^o	temperature
T_x	transferred to
Tab(s)	Tablet (s)
telo	telogen
tiss	tissue
TPS Cl	triphenylselenium chloride
TS, t/s	tape sealed
v.	very
var	variable
vert.	vertical
V's	victim's

COPYRIGHT © 2023
VIRGINIA DEPARTMENT OF FORENSIC SCIENCE

UNCONTROLLED COPY

VM	voice mail
VMX	voice mail
VSP	Virginia State Police
w/	with
WEN	white envelope
w/o	without
wk	weak
WPB	white paper bag
wrt	with respect to
x-polars	crossed polars
X	times (3X or X3 means 3 times)
XT	extract
x-section	cross-section
YEN	yellow envelope
z/l	ziplock
zplb	ziplock plastic bag

COPYRIGHT © 2023

VIRGINIA
DEPARTMENT
OF
FORENSIC SCIENCE

UNCONTROLLED
COPY